PRODUCT CATALOG

Q3.2020.EN

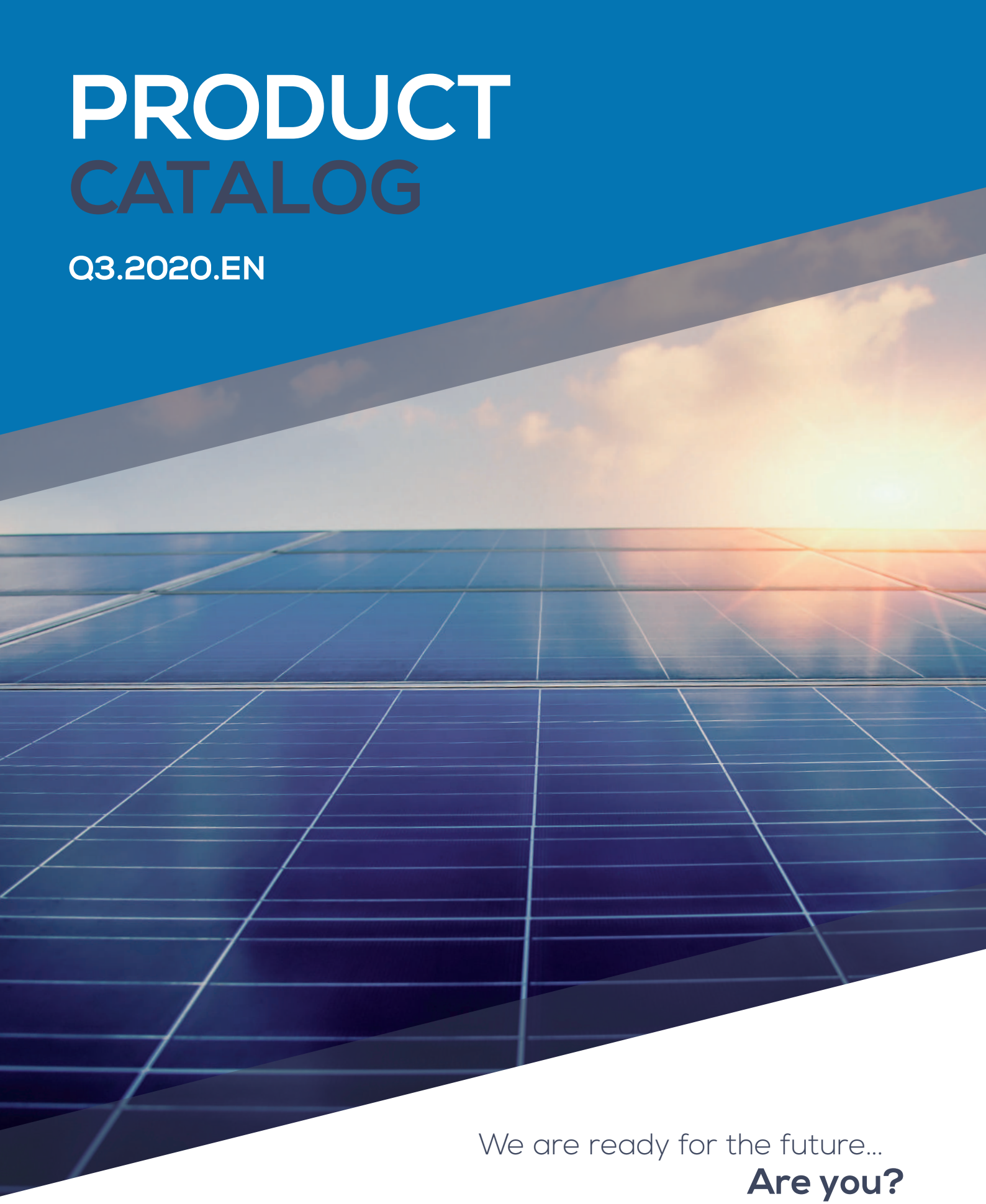

We are ready for the future...
Are you?

voltalia

THE COMPANY

Voltalia is an international renewable energy company producing electricity from many sources (wind, solar power, hydropower and biomass combining storage solutions), with 1GW of installed capacity by 2020.

It also provides services to independent customers. Voltalia operates in 20 countries over 4 continents and is able to act worldwide on behalf of its customers.

Acting as a Distributor on a global scale, since 2008, enabled us to supply more than 900 MW of solar PV technology, making sure that distribution is always accompanied by knowledge and services that add value for/to our customers, in the residential and industrial sector.

The distribution business line of Voltalia, is specialized in the distribution of Solar Equipment: modules, inverters, mounting systems, batteries, monitoring systems, PV components and residencial kits.

On the distribution, our aim is to provide added value solutions to meet our clients' requirements and contribute to the expansion of their business, building a real partnership with them.

Flexibility, excellence in service and continuous technological innovation are our guidelines, conceived to provide installers worldwide with the best offer for all kinds of PV installations: ground based, rooftop, BIPV, small generation and off-grid.

YOUR PV PARTNER

We are more than a sustainable solutions partner/provider, we also aim to contribute to expand your business, building a strong partnership that will benefit both parties.

- Our team is devoted in finding the best solutions and products to fullfill your PV requirements.
- Our more than 12 years PV expertise and know how guarantee the quality and reliability of the products and solutions we distribute.
- We are flexible, and we supply customized solutions.

WE FOCUS NOT ONLY ON THE PRODUCT, BUT ALSO ON THE SERVICE:

- Personalized Commercial Attention / Local dedicated Sales Force;
- Technical support / Training workshops;
- Logistics and Warehousing:
  - Flexible Logistics provided by large and reliable International and local logistics network;
- After Sales Service;
- Team with local presence;
- We speak your language.

We are ready for the future. Our intensive and continuous technological innovation efforts will result in the development of the products and solutions, you are waiting for.

OUR MISSION

Voltalia Distribution business line commitment is much more than towards quality and service; we are also highly involved in the environmental protection and in the research and development of new photovoltaic solutions to build together with our clients and partners a safer and greener future.

INDEX

05. Modules

17. Inverters

35. Batteries

45. Mounting Systems

63. Monitoring Systems

69. Equipment & Acessories

73. Residential Kits

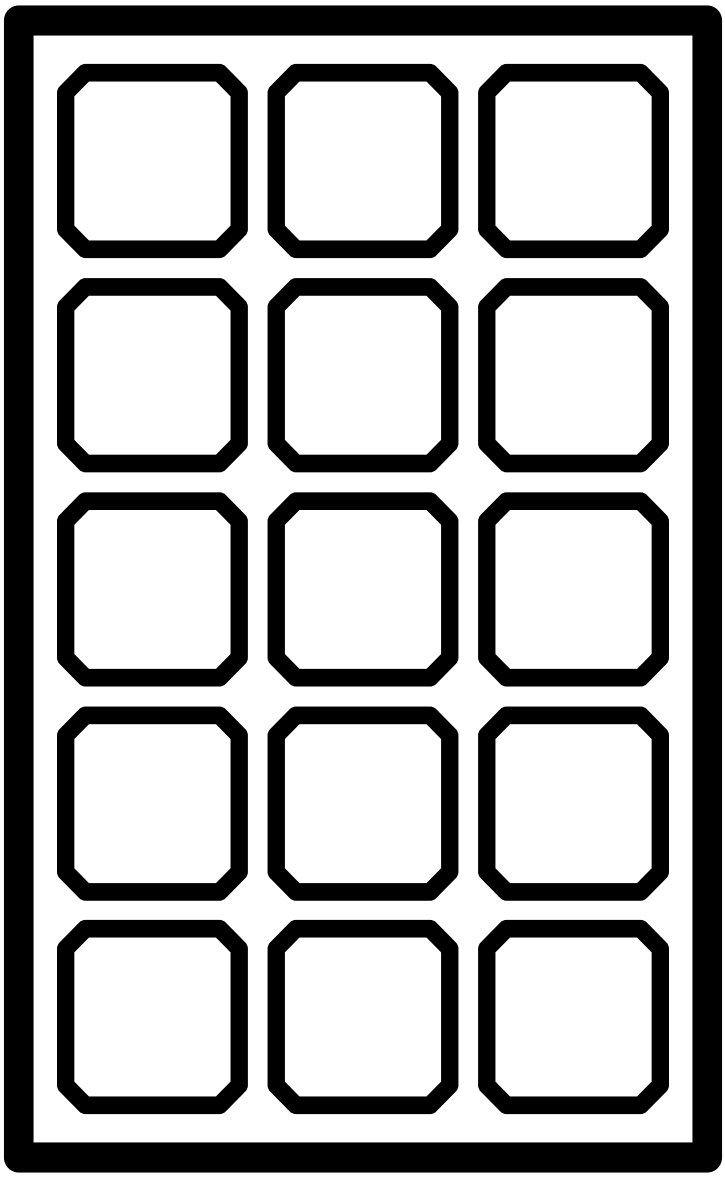

Solar Modules

ASTRONERGY
A CHINT COMPANY

+ video

Company

Astronergy/Chint Solar is a specialized subsidiary of the CHINT group and is engaged in the PV power station development and PV module production. Astronergy is currently one of the largest domestic PV power generation enterprises with 4000MWp of PV Power Stations and 3500MWp module production capacity. The Company's total registered capital is up to RMB 8.28 billion. Depending on the advantage of CHINT group's full industrial chain and the professional teams, Chint can provide the one-stop solution of PV power station to our customers.

In 2014, Astronergy acquired the PV module factory located in Frankfurt Germany and it had become the first domestic merger and acquisition of German PV module producer. The local government also named a main road as "CHINT Avenue".

Not only in China, Astronergy also built solar plants all over the world, such as Thailand, Spain, the United States, India, Bulgaria, Romania, South Africa, Japan etc. Since Astronergy has launched the residential rooftop power station solution in the past two years, the installed capacity has reached more than 40,000 sets.

- One of the leading solar companies in China
- The solar power system solution provider
- German Quality
- Bloomber Tier1 Module Provider

CHINT's Culture

CHINT is a company encouraging vigor, innovation, spirit of entrepreneurship and marching forward pertinaciously.

As CHINT believes in and always adheres to the VALUES of Harmonization/ Learning/Practical/Innovation.

Vision: To be the leading provider of intelligent energy solutions.

AstroSemi™

NEW

320W ~ 335W

Monocrystalline PV Module

+ info

Model	320 CHSM60M(BL)-HC	325 CHSM60M(BL)-HC	330 CHSM60M(BL)-HC	335 CHSM60M(BL)-HC
Maximum Efficiency	18.9%	19.2%	19.5%	19.8%
Weight / Dimensions	19.1 kg / 1692 x 1002 x 35 mm			
Tolerance	0~+5W			
PMPP Temperature Coefficient	- 0.34%/°C			
Cells	Perc Monocrystalline			
Maximum mechanical test load	5400 Pa (front) / 2400 Pa (back)			
Product Warranty	12 years for Materials and Processing | 25 years for extra Linear Power Output			

*some models can be supplied with Silver Frame

AstroSemi™

NEW

335W ~ 350W

Monocrystalline PV Module

+ info

Model	335 CHSM60M-HC	340 CHSM60M-HC	345 CHSM60M-HC	350 CHSM60M-HC
Maximum Efficiency	19.8%	20.1%	20.3%	20.6%
Weight / Dimensions	19.1 kg / 1692 x 1002 x 35 mm			
Tolerance	0~+5W			
PMPP Temperature Coefficient	- 0.34%/°C			
Cells	Perc Monocrystalline			
Maximum mechanical test load	5400 Pa (front) / 2400 Pa (back)			
Product Warranty	12 years for Materials and Processing | 25 years for extra Linear Power Output			

*some models can be supplied with black frame/all black

AstroSemi™

NEW

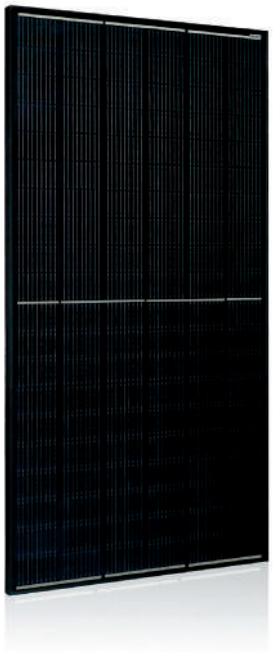

355W ~ 365W

Monocrystalline PV Module

+ info

Model	355 CHSM60M(BL)-HC	360 CHSM60M(BL)-HC	365 CHSM60M(BL)-HC
Maximum Efficiency	19.2%	19.5%	19.7%
Weight / Dimensions	20.0 kg / 1765 x 1048 x 35 mm		
Tolerance	0~+5W		
PMPP Temperature Coefficient	- 0.34%/°C		
Cells	Perc Monocrystalline		
Maximum mechanical test load	5400 Pa (front) / 2400 Pa (back)		
Product Warranty	12 years for Materials and Processing | 25 years for extra Linear Power Output		

*some models can be supplied with Silver Frame

AstroSemi™

NEW

370W ~ 380W

Monocrystalline PV Module

+ info

Model	370 CHSM60M-HC	375 CHSM60M-HC	380 CHSM60M-HC
Maximum Efficiency	20.0%	20.3%	20.5%
Weight / Dimensions	20.0 kg / 1765 x 1048 x 35 mm		
Tolerance	0~+5W		
PMPP Temperature Coefficient	- 0.34%/°C		
Cells	Perc Monocrystalline		
Maximum mechanical test load	5400 Pa (front) / 2400 Pa (back)		
Product Warranty	12 years for Materials and Processing | 25 years for extra Linear Power Output		

*some models can be supplied with black frame/all black

AstroSemi™

NEW

405W ~ 420W

Monocrystalline PV Module

+ info

Model	405 CHSM72M-HC	410 CHSM72M-HC	415 CHSM72M-HC	420 CHSM72M-HC
Maximum Efficiency	20.0%	20.3%	20.5%	20.8%
Weight / Dimensions	22.6 kg / 2018 x 1002 x 35 mm			
Tolerance	0~+5W			
PMPP Temperature Coefficient	- 0.35%/°C			
Cells	Perc Monocrystalline			
Maximum mechanical test load	5400 Pa (front) / 2400 Pa (back)			
Product Warranty	12 years for Materials and Processing | 25 years for extra Linear Power Output			

*some models can be supplied with black frame/all black

AstroSemi™

NEW

445W ~ 455W

Monocrystalline PV Module

+ info

Model	445 CHSM72M-HC	450 CHSM72M-HC	455 CHSM72M-HC
Maximum Efficiency	20.1%	20.4%	20.6%
Weight / Dimensions	24.0 kg / 2108 x 1048 x 35 mm		
Tolerance	0~+5W		
PMPP Temperature Coefficient	- 0.35%/°C		
Cells	Perc Monocrystalline		
Maximum mechanical test load	5400 Pa (front) / 2400 Pa (back)		
Product Warranty	12 years for Materials and Processing | 25 years for extra Linear Power Output		

*some models can be supplied with black frame/all black

Chint Warranty

+ info

+ video

A World-Class Solar Product Manufacturer

As a world-class solar products manufacturer, Seraphim specializes in research, development, production, and sales of solar PV products. Since its foundation in 2011, Seraphim has accomplished significant achievements which outpaced most of our main competitors in terms of production capacity and in the number of innovative designs. Seraphim upholds its belief that innovation is the key driver behind advancement by pursuing new technologies and higher efficiencies. Seraphim is accredited as Batch I Smart Manufacturing Plant by Jiangsu Government, the Witness Laboratory Accreditation Certificate (WMTC) by CSA and TMP Laboratory Certificate by TUV SUD. These are examples of Seraphim's endeavors and achievements in innovation within the industry. We are proud to be a leader in the PV industry in terms of technological innovations. Seraphim is listed as Tier 1 solar module maker by BNEF. Currently, Seraphim has a global production capacity of 5GW. Seraphim serves worldwide customers with high-quality products and professional services. So far more than 6GW Seraphim's products have been widely applied in over 40 countries.

Vision and Mission

Vision

Shifting the future into a better world.

Mission

Quality is the cornerstone of success. Seraphim's continuous innovation towards better quality products and new technologies allows us to share our success with our clients.

Seraphim®

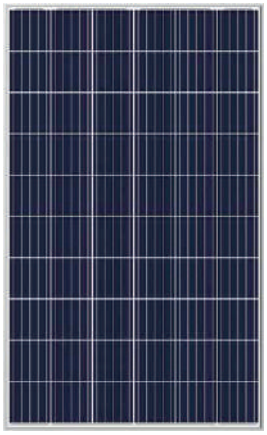

270W ~ 285W

SRP-6PB Series 6 inch 60 cells

10 YEARS Warranty on Product Material and Workmanship — 25 YEARS Warranty Linear Power Output

+ info

Model	SRP-270-6PB	SRP-275-6PB	SRP-280-6PB	SRP-285-6PB
Maximum Efficiency	16.60%	16.90%	17.21%	17.52%
Weight / Dimensions	17.5kg / 1640 x 992 x 35mm			
Tolerance	(0,+4.99)			
Pmax Temperature Coefficient	-0.39%/°C			
Cells	Polycrystalline (60 cells)			
Mechanical Load	5400 Pa			

*some models can be supplied with black frame/all black

Seraphim®

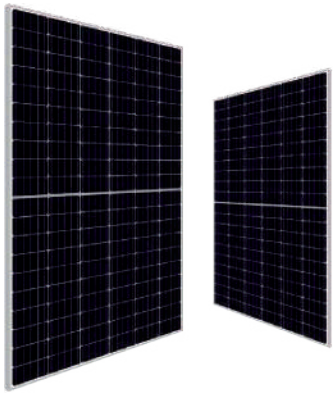

310W ~ 325W

Blade

15 YEARS Warranty on Product Material and Workmanship — 25 YEARS Warranty Linear Power Output

+ info

Model	SRP-310-BMB	SRP-315-BMB	SRP-320-BMB	SRP-325-BMB
Maximum Efficiency	18.67%	18.97%	19.27%	19.57%
Weight / Dimensions	18.5 kg / 1674 x 992 x 35 mm			
Tolerance	(0,+4.99)			
Pmax Temperature Coefficient	-0.38%/°C			
Cells	Perc Monocrystalline (Half-cell Tecnhology)			
Mechanical Load	5400 Pa			

*some models can be supplied with black frame/all black

Seraphim®

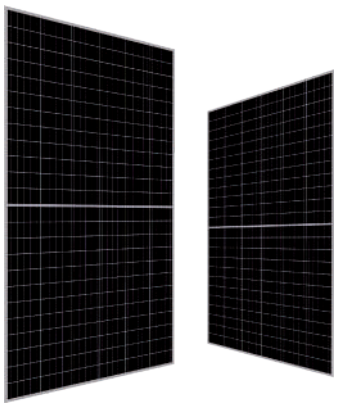

385W ~ 400W

Blade

15 YEARS Warranty on Product Material and Workmanship — 25 YEARS Warranty Linear Power Output

+ info

Model	SRP-385-BMA	SRP-390-BMA	SRP-395-BMA	SRP-400-BMA
Maximum Efficiency	19.07%	19.32%	19.56%	19.81%
Weight / Dimensions	23.0kg / 2015 x 1002 x 40 mm			
Tolerance	(0,+4.99)			
Pmax Temperature Coefficient	-0.38 %/°C			
Cells	Perc Monocrystalline (Half-cell Tecnhology)			
Mechanical Load	5400 Pa			

*some models can be supplied with black frame/all black

JA SOLAR

+ video

NEW

Company

Founded in 2005, JA Solar is a manufacturer of high-performance photovoltaic products. With 12 manufacturing bases and more than 20 branches around the world, the company's business covers silicon wafers, cells, modules and photovoltaic power stations. JA Solar products are available in over 120 countries and regions and are used extensively in ground-mounted power plants, commercial & industrial rooftop PV systems and residential rooftop PV systems. With its advantages of continuous technological innovation, sound financial performance, and well-established global sales and service networks, JA Solar has been well received and highly recognized by clients from home and abroad. The company has been listed on Fortune China 500 and Global Top 500 New Energy Enterprises for several consecutive years.

Annual Sales Revenue (2019): ¥21.2 billion
Cumulative Shipments (As of Q4, 2019): 45GW
Clients Worldwide (As of Q4, 2019): 33000
Employees (As of Q4, 2019): 22000

320W PERC Module

NEW

300-320/PR

JAM60S01

+ info

Model	JAM60S01 -300/PR	JAM60S01 -305/PR	JAM60S01 -310/PR	JAM60S01 -315/PR	JAM60S01 -320/PR
Maximum Efficiency	18.3%	18.7%	19.0%	19.3%	19.6%
Weight / Dimensions	18.2kg / 1650 x 991 x 35 mm				
Tolerance	0~+5W				
Pmax Temperature Coefficient	-0.380%/°C				
Cells	Perc Monocrystalline				
Mechanical Load	5400 Pa (front) / 2400 Pa (back)				
Product Warranty	12-year product warranty | 25-year linear power output warranty				

*some models can be supplied with black frame/all black

325W PERC Black Module

NEW

305-325/PR

JAM60S12

+ info

Model	JAM60S12 -305/PR	JAM60S12 -310/PR	JAM60S12 -315/PR	JAM60S12 -320/PR	JAM60S12 -325/PR
Maximum Efficiency	18.5%	18.8%	19.1%	19.4%	19.7%
Weight / Dimensions	18.4kg / 1657 x 996 x 35 mm				
Tolerance	0~+5W				
Pmax Temperature Coefficient	-0.370%/°C				
Cells	Perc Monocrystalline				
Mechanical Load	5400 Pa (front) / 2400 Pa (back)				
Product Warranty	12-year product warranty | 25-year linear power output warranty				

*some models can be supplied with Silver Frame

340W Multi-busbar Half-Cell Black Module

NEW

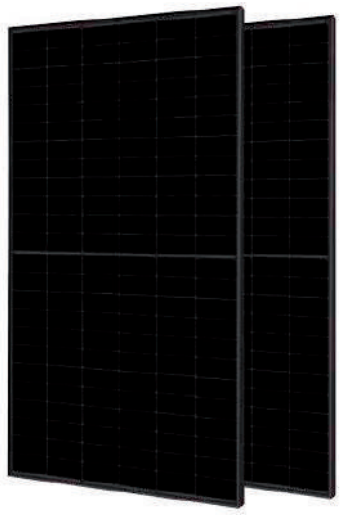

320-340/MR

JAM60S17

+ info

Model	JAM60S17 -320/MR	JAM60S17 -325/MR	JAM60S17 -330/MR	JAM60S17 -335/MR	JAM60S17 -340/MR
Maximum Efficiency	19.0%	19.3%	19.6%	19.9%	20.2%
Weight / Dimensions	19.0kg / 1689 x 996 x 35 mm				
Tolerance	0~+5W				
Pmax Temperature Coefficient	-0.350%/°C				
Cells	Perc Monocrystalline				
Mechanical Load	5400 Pa (front) / 2400 Pa (back)				
Product Warranty	12-year product warranty | 25-year linear power output warranty				

*some models can be supplied with Silver Frame

340W MBB Half-Cell Module

NEW

320-340/MR

JAM60S10

+ info

Model	JAM60S10 -320/MR	JAM60S10 -325/MR	JAM60S10 -330/MR	JAM60S10 -335/MR	JAM60S10 -340/MR
Maximum Efficiency	19.0%	19.3%	19.6%	19.9%	20.2%
Weight / Dimensions	19.0kg / 1689 x 996 x 35 mm				
Tolerance	0~+5W				
Pmax Temperature Coefficient	-0.350%/°C				
Cells	Perc Monocrystalline				
Mechanical Load	5400 Pa (front) / 2400 Pa (back)				
Product Warranty	12-year product warranty | 25-year linear power output warranty				

*some models can be supplied with black frame/all black

385W PERC Module

NEW

365-385/PR

JAM72S01

+ info

Model	JAM72S01 -365/PR	JAM72S01 -370/PR	JAM72S01 -375/PR	JAM72S01 -380/PR	JAM72S01 -385/PR
Maximum Efficiency	18.8%	19.0%	19.3%	19.6%	19.8%
Weight / Dimensions	22kg / 1960 x 991 x 40 mm				
Tolerance	0~+5W				
Pmax Temperature Coefficient	-0.380%/°C				
Cells	Perc Monocrystalline				
Mechanical Load	5400 Pa (front) / 2400 Pa (back)				
Product Warranty	12-year product warranty | 25-year linear power output warranty				

*some models can be supplied with black frame/all black

JASolar Warranty

+ info

A **new** perspective of **shine**

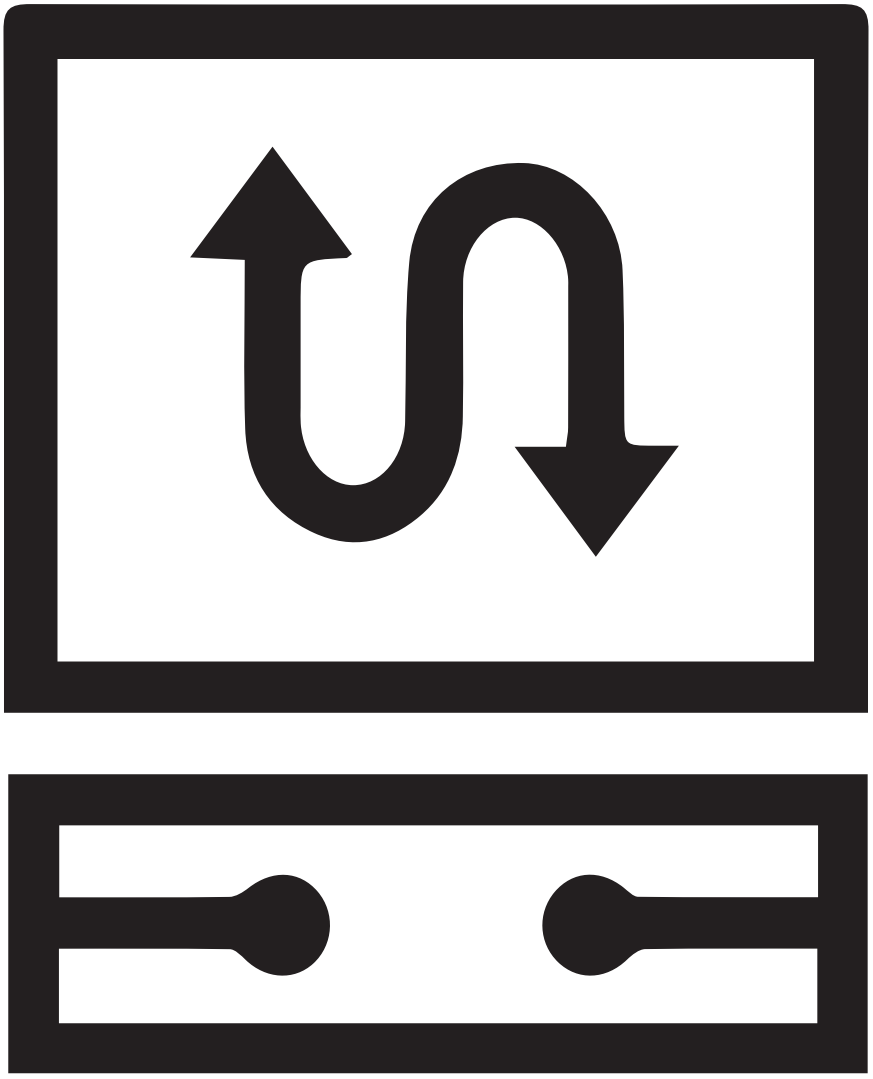

Inverters

+ video

Company

Hoymiles is a world's leading microinverter company specializing in MLPE (Module LevelPowerElectronics)solutions for global solar investors & end users.

As one of the fastest growing solar inverter brands globally, Hoymiles has offered a safer, smarter & easier module-leve l MPPT & module-level monitoring microinverter in over 50 countries covering the United States, Europe, the UK, Aust ralia,LATAM, India, Japan, Korea, South East Asia, Middle East & South Africa.

Back in 2008, Hoymiles was founded by 3 post-doctors as a R&D team in China's National Power Electronics Lab based at Zhejiang University, one of the top 3universities in China and one of the top 60 in the world.

In 2015, Hoymiles microinverter achieved the world's No.1 CEC peak efficiency - 96.7% in California, the United States, by which Hoymiles was ranked worldwide as the most efficient microinverter, in comparison with other reputable and respectable microinverter brands known among global installers & end users.

Today, 10,000+ commercial & residential roof-top installations (the biggest one 3.6MW) are built annuallywith different types of Hoymiles microinverters: single panel unit(MI-250/300), 2 in 1unit(MI-500/600/700) & 4 in 1 unit(MI-1000/1200).

With constant efforts of Hoymiles 500+ staff & local distribution/service partners all over the world, Hoymiles has established its local logistics & Service in over 20 countries, e.g. Germany, Netherlands,Poland, Estonia, Brazil, Mexico, South Africa, the United States, Canada, Korea & India etc., LOCALIZATION combined with local warehouses, local training & local service centers keeps Hoymiles together with local customers 24/7/365.

Hoymiles

MI-250/300/350

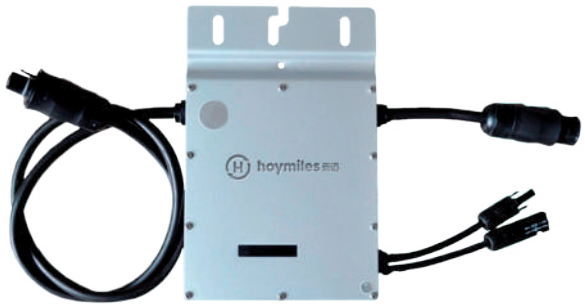

Warranty

Maximum output power up to 250/300/350W
Adapted to 60 & 72 cells PV panels

Peak efficiency 96.70%
CEC weighted efficiency 96.50%

Static MPPT efficiency 99.80%
Dynamic MPPT efficiency 99.76% in overcast weather

High reliability
NEMA6 (IP67) enclosure
6000V surge protection

+ info

Model	DC Power	Peak Efficiency	Output Power	Weight (kg)	Dimensions
MI-250	Up to 310	96.70%	250	1.98 (including 1.9m AC cable)	178 x 153 x 28 mm
MI-300	Up to 380		300		
MI-350	Up to 440		350		

Hoymiles

MI-500/600/700

Warranty

Single microinverter connects two PV
modules with individual MPPT

Maximum output power up to 500/600/700W
Adapted to 60 & 72 cells PV panels

Peak efficiency 96.70%
CEC weighted efficiency 96.50%

Static MPPT efficiency 99.80%
Dynamic MPPT efficiency 99.76% in overcast weather

High reliability
NEMA6 (IP67) enclosure
6000V surge protection

+ info

Model	DC Power	Peak Efficiency	Output Power	Weight (kg)	Dimensions
MI-500	Up to 310	96.70%	500	3.00 (including 2.32m AC cable)	250 x 170 x 28 mm
MI-600	Up to 380		600		
MI-700	Up to 440		700		

+ video

Company

Huawei, a leading global ICT and network energy solutions provider, serves more than one-third of the world's population. We have nearly 188,000 employees, and we operate in more than 170 countries and regions, serving more than three billion people around the world. With over CNY480 billion invested into R&D over the past decade, Huawei continues to innovate based on customer needs and are committed to enhancing customer experience and delivering maximum value.

FusionSolar

With an established presence in solar markets worldwide, Huawei provides new generation string inverters with smart management technology to create a fully digitalized Smart PV Solution – FusionSolar®. FusionSolar® is smart, safe and reliable whilst consistently delivering high yields and ROI, making Huawei the preferred choice for investors and developers worldwide. Huawei has been ranked as No.1 in the world for global inverter shipments from 2015 to 2018.

Smart Energy Center

SUN2000L-2/3/3.68/4/4.6/5KTL

reddot award 2016 winner

- Higher Revenue
- Simple & Easy
- Battery Ready
- Safe & Reliable

+ info

Model	Maximum Power	Maximum Efficiency	Nominal Power	MPPT	Protection
SUN2000L-2KTL	2200 VA	98.4%	2000 W	2	IP65
SUN2000L-3KTL	3300 VA	98.5 %	3000 W		
SUN2000L-3.68KTL	3680 VA	98.5 %	3680 W		
SUN2000L-4KTL	4400 VA	98.6 %	4000 W		
SUN2000L-4.6KTL	5000 VA	98.6 %	4600 W		
SUN2000L-5KTL	5500 VA	98.6 %	5000 W		

Smart PV Optimizer

SUN2000P-375W

- Higher Revenue
- Simple & Easy
- Safe & Reliable

Model	SUN2000P-375W
Rated input power	375 W
Maximum Efficiency	99.6 %
Communication	PLC
Protection	IP68

Smart PV Safety Box

SmartPSB2000L

- Simple & Easy
- Safe & Reliable

Model	SmartPSB2000L
Maximum input voltage	1100 V
Maximum output voltage	1100 V
Numberof outputs	2
Communication	PLC,RS485
Protection	IP65

Smart Energy Center

SUN2000-2/3/3.68/4/4.6/5/6KTL-L1

NEW

- Active Safety
- Higher Yields
- 2x POWER Battery Ready

+ info

Model	Maximum Power	Maximum Efficiency	Nominal Power	MPPT	Protection
SUN2000L-2KTL-L1	2200 VA	98.2%	2000 W	2	IP65
SUN2000L-3KTL-L1	3300 VA	98.3 %	3000 W		
SUN2000L-3.68KTL-L1	3680 VA	98.4 %	3680 W		
SUN2000L-4KTL-L1	4400 VA	98.4 %	4000 W		
SUN2000L-4.6KTL-L1	5000 VA	98.4 %	4600 W		
SUN2000L-5KTL-L1	5500 VA	98.4 %	5000 W		
SUN2000L-6KTL-L1	6000 VA	98.4 %	6000 W		

Smart Energy Center

SUN2000-2/3/4/5KTL-L0

DESIGN AWARD 2017

reddot award 2016 winner

- Higher Revenue
- Simple & Easy
- Safe & Reliable

+ info

Model	Maximum Power	Maximum Efficiency	Nominal Power	MPPT	Protection
SUN2000-2KTL-L0	2200 VA	98.4%	2000 W	2	IP65
SUN2000-3KTL-L0	3300 VA	98.5 %	3000 W		
SUN2000-4KTL-L0	4400 VA	98.6 %	4000 W		
SUN2000-5KTL-L0	5500 VA	98.6 %	5000 W		

Smart Energy Center

Three-phase SUN2000-3/4/5/6/8/10KTL-M0

Higher Revenue

Simple & Easy

Battery Ready

Safe & Reliable

+ info

Model	Maximum Power	Maximum Efficiency	Nominal Power	MPPT	Protection
SUN2000-3KTL-M0	3300 VA	98.2%	3000 W	2	IP65
SUN2000-4KTL-M0	4400 VA	98.3%	4000 W		
SUN2000-5KTL-M0	5500 VA	98.4%	5000 W		
SUN2000-6KTL-M0	6600 VA	98.6%	6000 W		
SUN2000-8KTL-M0	8800 VA	98.6%	8000 W		
SUN2000-10KTL-M0	11000 VA	98.6%	10000 W		

Smart String Inverter

SUN2000-12/15/17/20KTL-M0

Higher Revenue

Simple & Easy

Safe & Reliable

+ info

Model	Maximum Power	Maximum Efficiency	Nominal Power	MPPT	Protection
SUN2000-12KTL-M0	13200 VA	98.50%	12000 W	2	IP65
SUN2000-15KTL-M0	16500 VA	98.65%	15000 W		
SUN2000-17KTL-M0	18700 VA	98.65%	17000 W		
SUN2000-20KTL-M0	22000 VA	98.65%	20000 W		

String Inverter

SUN2000-33KTL-A/36KTL

Smart

Efficient

Safe & Reliable

+ info

Model	Maximum Power	Maximum Efficiency	Nominal Power	MPPT	Protection
SUN2000-33KTL-A	33000 VA	98.6%	30000 W	4	IP65
SUN2000-36KTL	40000 VA	98.6%	36000 W		

Smart String Inverter

SUN2000-60KTL-M0/105KTL-H1

Smart

Efficient

Safe & Reliable

+ info

Model	Maximum Power	Maximum Efficiency	Nominal Power	MPPT	Protection	AC Voltage
SUN2000-60KTL-M0	66000 VA	98.9%@480 V 98.6%@400 V	60000 W	6	IP65	400 V
SUN2000-105KTL-H1	116000 VA	99.0%	105000 W			800 V

Smart String Inverter

SUN2000-100KTL-M1

10 MPP Trackers

98.8% (@480V) Max. Efficiency

String-level Management

Smart I-V Curve Diagnosis Supported

MBUS Supported

Fuse Free Design

Surge Arresters for DC & AC

IP66 Protection

+ info

Model	Maximum Power	Maximum Efficiency	Nominal Power	MPPT	Protection	AC Voltage
SUN2000-100KTL-M1	110000 VA	98.8%@480 V 98.6%@380V / 400V	100000 W	10	IP66	400 V

Smart String Inverter

SUN2000-185KTL-H1

9 MPP Trackers

99% Max. Efficiency

String-level Management

Smart I-V Curve Diagnosis Supported

MBUS Supported

Fuse Free Design

Surge Arresters for DC & AC

IP66 Protection

+ info

Model	Maximum Power	Maximum Efficiency	Nominal Power	MPPT	Protection	AC Voltage
SUN2000-185KTL-H1	185000 VA	99.03%	185000 W	9	IP66	800 V

+ video

Company

GoodWe is a leading, strategically-thinking enterprise which focuses on research and manufacturing of PV inverters and energy storage solutions. With an average monthly sales volume of 30,000 pieces in 2019 and 12 GW installed in more than 100 countries, GoodWe solar inverters have been largely used in residential rooftops, commercial systems and energy storage systems. GoodWe ranked as World Top 10 solar inverter manufacturer by Bloomberg, IHS & Wood Mackenzie. GoodWe benchmarks its success on the success achieved by its customers by identifying and integrating the most advanced components and techniques available while offering an unparalleled after-sales service.

GoodWe has set up an integrated service system for pre-sale, in-sale and after-sale and has established service centers worldwide. The company has developed a concept of workshops which aim to offer global support to all customers including project consulting, technical training, onsite support and after-sales service.

As a stable, bankable company, GoodWe has built its corporate reputation by achieving sustainable growth in every market it operates in. A prudent, step-by-step approach of strategic growth and consolidation offers longevity, profitable growth and increased market share; a business model also adopted by some of the world's leading renewable companies.

Mission

To provide seamless and hassle-free products and solutions.

Vision

The impact of coal-fired power plants pose a huge threat to our environment and public health. As an advocate for a greener environment, it is our responsibility to provide a more sustainable future for the new generations to come.

XS Series

Single-MPPT, Single-Phase

- A4 size
- Light weight
- 30% DC oversizing
- 97% European Efficiency
- LAN/WIFI communication

+ info

Model	Maximum Power	Maximum Efficiency	Nominal Power	MPPT	Protection
GW700-XS	910	97.2%	700	1	IP65
GW1000-XS	1300	97.2%	1000		
GW1500-XS	1950	97.3%	1500		
GW2000-XS	2600	97.5%	2000		
GW2500-XS	3250	97.4%	2500		
GW3000-XS	3900	97.4%	3000		

DNS Series

Dual-MPPT, Single-Phase

- Lowest startup voltage at 120V
- Wide range of MPPT voltage
- Small, lightweight and easy to install
- Built-in anti-reserve function
- IP65 dustproof and waterproof
- Fanless and noiseless

+ info

Model	Maximum Power	Maximum Efficiency	Nominal Power	MPPT	Protection
GW3000D-NS	3900	97.8%	3000	2	IP65
GW3600D-NS	4680	97.8%	3600		
GW4200D-NS	5460	97.8%	4200		
GW5000D-NS	6500	97.8%	5000		
GW6000D-NS	7200	97.8%	6000		

SDT Series

Dual-MPPT, Three-Phase

- Easy wall mounting
- Super large 5-inch LCD
- RS485, LAN & Wi-Fi communication
- IP65 dustproof and waterproof

+ info

Model	Maximum Power	Maximum Efficiency	Nominal Power	MPPT	Protection
GW12KN-DT	16800	98.3%	12000	2	IP65
GW15KN-DT	19500	98.3%	15000		
GW17KN-DT	22100	98.6%	17000		
GW20KN-DT	26000	98.6%	20000		

DT Series

Dual-MPPT, Three-Phase

NEW

- Super large 5-inch LCD
- Export Control
- 30% DC Overload
- 30% lighter

+ info

Model	Maximum Power	Maximum Efficiency	Nominal Power	MPPT	Protection
GW17K-DT	17000	98.2%	17000	2	IP65
GW20K-DT	20000	98.4%	20000		
GW25K-DT	25000	98.4%	25000		

SMT Series

Three-MPPT, Three-Phase

- Compact and lightweight
- 30% DC input oversizing
- Up to 10% AC output overloading
- Wide MPPT range from 200 V to 950 V
- IP65 dustproof and waterproof

+ info

Model	Maximum Power	Maximum Efficiency	Nominal Power	MPPT	Protection
GW25K-MT	32500	98.7%	25000	3	IP65
GW30K-MT	39000	98.8%	30000		
GW36K-MT	42900	98.8%	36000		

MT Series

Four-MPPT, Three-Phase

- 30% DC input oversizing ratio
- 15% AC output overloading ratio
- Smart monitoring for 13 strings
- Full-load running at 50°C
- Integrated bussman fuse for panel protection

+ info

Model	Maximum Power	Maximum Efficiency	Nominal Power	MPPT	Protection
GW50K-MT	65000	98.7%	50000	4	IP65
GW50KN-MT	65000	98.7%	50000		
GW60K-MT	80000	98.8%	60000		
GW60KN-MT	80000	98.8%	60000		
GW50KBF-MT	65000	98.8%	50000		
GW60KBF-MT	80000	98.8%	60000		
GW70KHV-MT	91000	99.0%	70000		
GW80KHV-MT	120000	99.0%	80000		
GW80KBF-MT	104000	99.0%	80000		

ET Series

Three-phase, Energy Storage Inverter (HV Battery)

- **Compact size & light weight**
- **Maximum efficiency up to 98.2%**
- **Uninterruptible power supply**
- **Wide battery voltage range**
- **Fanless design, quiet operation**

+ info

Model	Maximum Power	Maximum Efficiency	Nominal Power	MPPT	Protection
GW5K-ET	6500	98.0%	5000	2	IP65
GW8K-ET	9600	98.2%	8000		
GW10K-ET	13000	98.2%	10000		

ES Series

Single Phase Hybrid Inverter (LV Battery)

- **Charge controller and inverter integrated**
- **Export control (Zero export)**
- **Safe and reliable UPS function with automatic switchover time of 10 ms**
- **Maximum charge and discharge up to 100A**
- **IP65 dustproof and waterproof**
- **Fanless design, long lifespan**

+ info

Model	Maximum Power	Maximum Efficiency	Nominal Power	MPPT	Protection
GW3648D-ES	4600	97.6%	3680	2	IP65
GW5048D-ES	6500	97.6%	4600		

EM Series

Single Phase Hybrid Inverter (LV Battery)

- **Smart battery management function**
- **Export control (Zero export)**
- **Safe and reliable UPS function with automatic switchover time of 10 ms**
- **50A charge & discharge capacity**
- **IP65 dustproof and waterproof**
- **Fanless design, long lifespan**

+ info

Model	Maximum Power	Maximum Efficiency	Nominal Power	MPPT	Protection
GW3048-EM	3900	97.6%	3000	1	IP65
GW3648-EM	4600	97.6%	3680	2	
GW5048-EM	6500	97.6%	5000		

+ video

Company

As a leading global specialist in photovoltaic system technology, SMA is setting the standards today for the decentralized, digital and renewable energy supply of tomorrow. More than 3,000 SMA employees in 18 countries have devoted themselves to this task. Our innovative solutions for every type of photovoltaic application offer people and companies worldwide greater independence in meeting their energy needs. In collaboration with our partners and customers, we are helping people transition to a self-sufficient, decentralized and renewable energy supply.

Technological Leadership

For over 35 years, SMA has been setting technological trends and driving the development of renewable energies. With our groundbreaking inverter technology, we have made significant contributions in seeing that renewable energies leave the pioneer phase behind and increasingly become the norm worldwide.

Facts and Figures

Headquarters: Niestetal, Germany

Global presence: sales and service subsidiaries in 18 countries

Founded: 1981

Number of employees: over 3,000

2018 sales: about 761 million euros

SUNNY BOY
1.5/2.5

- **Interfaces included:** Speedwire/Webconnect, Modbus TCP and WI-FI
- **Accessories Included:** DC disconnection point

+ info

Model	Maximum Generator Power	Maximum Efficiency	Nominal Power	MPPT	Protection
Sunny Boy 1.5	1600	97.2%	1500	1	IP65
Sunny Boy 2.5	2650	97.2%	2500		

SUNNY BOY
3.0/3.6/4.0/5.0/6.0

- **Interfaces included:** Speedwire/Webconnect, Modbus TCP and WI-FI
- **Accessories Included:** DC disconnection point

+ info

Model	Maximum Generator Power	Maximum Efficiency	Nominal Power	MPPT	Protection
Sunny Boy 3.0	5500	97.0%	3000	2	IP65
Sunny Boy 3.6	5500	97.0%	3680		
Sunny Boy 4.0	7500	97.0%	4000		
Sunny Boy 5.0	7500	97.0%	5000		
Sunny Boy 6.0	9000	97.0%	6000		

SUNNY TRIPOWER
3.0/4.0/5.0/6.0

- **Interfaces included:** WLAN / Ethernet / RS485
- **Accessories Included:** DC connection / AC connection

+ info

Model	Maximum Power	Maximum Efficiency	Nominal Power	MPPT	Protection
Sunny Tripower 3.0	6000	98.2%	3000	2	IP65
Sunny Tripower 4.0	8000	98.2%	4000		
Sunny Tripower 5.0	9000	98.2%	5000		
Sunny Tripower 6.0	9000	98.2%	6000		

SUNNY TRIPOWER
8.0 / 10.0

- **Interfaces included:** WLAN / Ethernet / RS485
- **Accessories Included:** DC connection / AC connection

+ info

Model	Maximum Generator Power	Maximum Efficiency	Nominal Power	MPPT	Protection
Sunny Tripower 8.0	15000	98.3%	8000	2	IP65
Sunny Tripower 10.0	15000	98.3%	10000		

SUNNY TRIPOWER
15000TL/20000TL/25000TL

- **Interfaces included:** Modbus TCP, Modbus SunSpec
- **Optional Interfaces:** RS485, SpeedWire/Webconnect
- **Optional Accessories:** Multifunction Relay, Power Control Module and DC Surge Arresters (Type II. and III) A + B.

+ info

Model	Maximum Generator Power	Maximum Efficiency	Nominal Power	MPPT	Protection
Sunny Tripower 15000TL	27000	98.4%	15000	2	IP65
Sunny Tripower 20000TL	36000	98.4%	20000		
Sunny Tripower 25000TL	45000	98.3%	25000		

SUNNY TRIPOWER CORE 1
STP 50-40

- **Interfaces included:** Ethernet / WLAN
- **Data Interfaces:** SMA Modbus / SunSpec Modbus/ Speedwire / Webconnect
- **Optional Interfaces:** RS485
- **Accessories Included:** DC connection / AC connection

+ info

Model	Maximum Power	Maximum Efficiency	Nominal Power	MPPT	Protection
Sunny Tripower CORE1	51000	>98.0%	50000	6	IP65

The energy in your hands

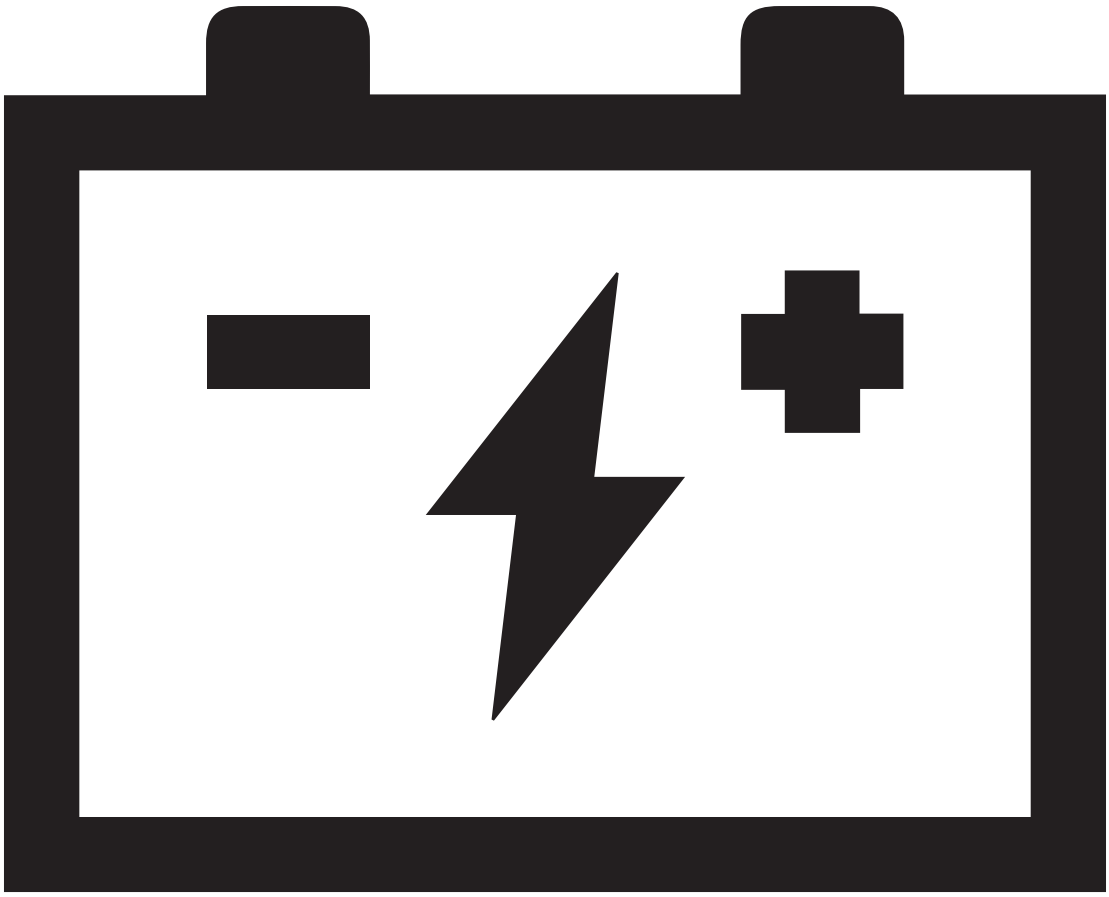

Batteries

+ video

LG Exceeds Expectations with Innovative Products

With a long history of achievements, LG is determined to maintain its momentum. We constantly bolster our professionalism and take steps toward becoming a leading global company.
LG Electronics aims at improving customers' life and business with leading products and world-class technology.

Sustainable Global Partnership

LG Electronics has a strong global network. We have manufacturing and production plants, sales offices, and research and development facilities in 118 global operations.

Expanding to Serve Enterprise Customers

LG has a solid presence in B2C fields, such as home appliance, home entertainment, and mobile communications. To support future growth in the B2B market, we keep developing our B2B portfolio. We also prepare for changes in industry and customer needs.

Global Network

72600
WORKFORCE

140
GLOBAL OPERATIONS

RESU

48v - ION-LITHIUM BATTERY WITH POLYMER CELLS

- **10 year warranty. More than 6000 cycles (90% DOD).**

+ info

Model	Total Energy	Useful Energy	Weight
RESU 3.3	3.3 kWh	2.9 kWh	31.0 kg
RESU 6.5	6.4 kWh	5.9 kWh	52.0 kg
RESU 10	9.8 kWh	8.8 kWh	75.0 kg

RESU

400v - ION-LITHIUM BATTERY WITH POLYMER CELLS

- **10 year warranty. More than 6000 cycles (90% DOD).**

+ info

Model	Total Energy	Useful Energy	Weight
RESU 7H	7.0 kWh	6.6 kWh	76.0 kg
RESU 10H	9.8 kWh	9.3 kWh	97-99.8 kg

+ video

Company

Established in 2012, AlphaESS specializes in advanced battery storage products and intelligent energy management solutions for residential and commercial customers.

With years of experience in both the clean energy and battery industries, the AlphaESS team helps families and businesses reduce their electricity costs and achieve energy independence through their own power generation, storage, and optimization.

AlphaESS products have spread to more than 50 countries through our partners, benefitting thousands of customers.

"Your Smart Energy" is our vision. AlphaESS is pursuing an ambitious goal of building an "energy internet," where everyone can produce their own clean energy and lead a sustainable lifestyle.

Alpha ESS Battery

M4856-P

- **HOME SERIE CAPACITY: 2.9 kWh**
- **Modular**
- **Outdoor / Indoor**
- **Safe**
- **Long lifespan**

+ info

Model	Energy Capacity	Usable Capacity	Weight
M4856-P	2.9 kWh	2.8 kWh	42 kg

Alpha ESS Battery

SMILE5-BAT

- **HOME SERIE CAPACITY: 5.7 kWh**
- **Modular**
- **Plug & play**
- **Safe**
- **Long lifespan**

+ info

Model	Total Energy	Useful Energy	Weight
Smile5-BAT	5.7 kWh	5.5 kWh	65 kg

+ video

Innovation at Exide

As a 130-year-old startup, we understand how critical innovation is to the future of both our company and our world. We're constantly reimagining our products and improving our processes, positioning Exide to be the global leader in energy storage for decades to come.

Battery Manufacturing Innovation

Exide's state-of-the-art punched grid industrial manufacturing facility in Kansas City, Missouri, brings value to customers and to the industry. Our high precision punching process ensures quality and eliminates grid variability. Technology innovations significantly increase production to better serve our customers.

Lead Battery Research

Exide Technologies is proud to be a part of groundbreaking research with the U.S. Department of Energy's Argonne National Laboratory and 13 other industry leaders. The research explores the complex chemical interactions that take place inside lead batteries.

Powering the World Forward

Exide Technologies is committed to providing world-class stored energy solutions that lead the industry in quality and performance, drive customer results and make a difference in people's lives. Exide will stand for safety, innovation and partnership while providing a rewarding workplace for our employees.

Integrity
Exide conducts business with integrity, openness and honesty – every day, in everything we do.

Quality
Quality, in all dimensions, is fundamental and will not be compromised.

Courage
We lead with the courage to challenge and disrupt the status quo while ensuring that we always "do the right thing" — for our Company, our employees and our customers.

Accountability
We take responsibility for our actions and hold ourselves accountable for results.

Safety
Exide is committed to protecting the environment and ensuring the health and safety of our employees and the people of the communities in which we operate.

Customer Success
Exide is committed to customer success and we will partner with our customers to deliver quantifiable, positive outcomes.

CLASSIC SOLAR

Classic OPzS

- **Optimised plate design – increased capacities compared to standard DIN OPzS.**
- **Tubular plates in block and single cell version – most robust design.**
- **Excellent standby and cycling behaviour – long life.**
- **Completely recyclable – low CO_2 footprint.**

+ info

Type	Nominal voltage	Nominal capacity C_{10} 1.80 Vpc 20°C	Length max.	Width max.	Height max.	Weight incl. acid approx.
6V 4 OPzS 200 LA	6 V	200 Ah	272 mm	206 mm	347 mm	41.0 kg
6V 5 OPzS 250 LA	6 V	250 Ah	380 mm	206 mm	347 mm	56.0 kg
6V 6 OPzS 300 LA	6 V	300 Ah	380 mm	206 mm	347 mm	63.0 kg
12V 1 OPzS 50 LA	12 V	50.0 Ah	272 mm	206 mm	347 mm	34.0 kg
12V 2 OPzS 100 LA	12 V	100 Ah	272 mm	206 mm	347 mm	43.0 kg
12V 3 OPzS 150 LA	12 V	150 Ah	380 mm	206 mm	347 mm	64.0 kg

CLASSIC SOLAR

Tudor EAN Cells

- **Low Maintenance**
- **Tubular Plates – robust design**
- **20 years Design Life in float applications**
- **Excellent Cycling Capability**
- **Capacity exceeding DIN standard**
- **Completely recyclable – low CO_2 footprint**

+ info

EAN Type	Nominal voltage	Nominal capacity C_{10} 1.80 Vpc 20°C	Length max.	Width max.	Height max.	Weight incl. acid approx.
4 EAN 55	2 V	263 Ah	105 mm	208 mm	395 mm	18 kg
5 EAN 55	2 V	329 Ah	126 mm	208 mm	395 mm	20 kg
6 EAN 55	2 V	394 Ah	147 mm	208 mm	395 mm	23 kg
5 EAN 70	2 V	416 Ah	126 mm	208 mm	511 mm	30 kg
6 EAN 70	2 V	499 Ah	147 mm	208 mm	511 mm	35 kg
7 EAN 70	2 V	582 Ah	168 mm	208 mm	511 mm	40 kg
6 EAN 100	2 V	692 Ah	147 mm	208 mm	686 mm	46 kg
7 EAN 100	2 V	807 Ah	212 mm	193 mm	686 mm	58 kg
8 EAN 100	2 V	922 Ah	212 mm	193 mm	686 mm	63 kg
9 EAN 100	2 V	1037 Ah	212 mm	235 mm	686 mm	78 kg
10 EAN 100	2 V	1153 Ah	212 mm	235 mm	686 mm	85 kg
12 EAN 100	2 V	1383 Ah	212 mm	277 mm	686 mm	91 kg
14 EAN 100	2 V	1614 Ah	220 mm	370 mm	660 mm	101 kg
16 EAN 100	2 V	1844 Ah	220 mm	370 mm	660 mm	115 kg
20 EAN 100	2 V	2305 Ah	220 mm	450 mm	660 mm	139 kg
12 EAN 120	2 V	1684 Ah	212 mm	277 mm	836 mm	109 kg
16 EAN 120	2 V	2245 Ah	215 mm	400 mm	812 mm	173 kg
20 EAN 120	2 V	2806 Ah	215 mm	490 mm	812 mm	187 kg
22 EAN 120	2 V	3087 Ah	215 mm	580 mm	812 mm	215 kg
24 EAN 120	2 V	3367 Ah	215 mm	580 mm	812 mm	223 kg

SONNENSCHEIN SOLAR

SONNENSCHEIN SOLAR

- **Excellent cycling performance – 800 cycles at 60% Depth of Discharge C_{10} (at 20 °C)**
- **Dryfit Gel – VRLA technology**
- **Lowest energy consumption – saving costs**
- **Robust design – resilient in harsh conditions**
- **Proof against deep discharge – greater long-term energy delivery**
- **Completely recyclable – low CO_2 footprint**

+ info

Type	Nominal voltage	Nominal capacity C_{100} 1.80 Vpc 20°C	Length max.	Width max.	Height max.	Weight approx.
S12/6.6 S	12 V	6.60 Ah	152 mm	65.5 mm	98.4 mm	2.60 kg
S12/17 G5	12 V	17.0 Ah	181 mm	76 mm	167 mm	6.10 kg
S12/27 G5	12 V	27.0 Ah	167 mm	176 mm	126 mm	9.60 kg
S12/32 G6	12 V	32.0 Ah	197 mm	132 mm	184 mm	11.1 kg
S12/41 A	12 V	41.0 Ah	210 mm	175 mm	175 mm	14.2 kg
S12/60 A	12 V	60.0 Ah	261 mm	136 mm	230 mm	18.1 kg
S12/85 A	12 V	85.0 Ah	353 mm	175 mm	190 mm	26.8 kg
S12/90 A	12 V	90.0 Ah	330 mm	171 mm	236 mm	29.2 kg
S12/130 A	12 V	130.0 Ah	286 mm	269 mm	230 mm	37.5 kg
S12/230 A	12 V	230.0 Ah	518 mm	274 mm	238 mm	67.0 kg

SONNENSCHEIN SOLAR

SONNENSCHEIN SOLAR BLOCK

- **Excellent cycling performance – 1200 cycles at 60% Depth of Discharge C_{10} (at 20 °C)**
- **Dryfit Gel – VRLA technology**
- **Lowest energy consumption – saving costs**
- **Robust design – resilient in harsh conditions**
- **Proof against deep discharge – greater long-term energy delivery**
- **Completely recyclable – low CO_2 footprint**

+ info

Type	Nominal voltage	Nominal capacity C_{100} 1.80 Vpc 20°C	Length max.	Width max.	Height max.	Weight approx.
SB 6/200 A	6 V	200 Ah	246 mm	192 mm	275 mm	29.0 kg
SB 6/330 A	6 V	330 Ah	312 mm	182 mm	359 mm	47.0 kg
SB12/60 A	12 V	60.0 Ah	278 mm	175 mm	190 mm	19.0 kg
SB12/75 A	12 V	75.0 Ah	330 mm	171 mm	236 mm	28.8 kg
SB12/100 A	12 V	100 Ah	513 mm	189 mm	223 mm	36.5 kg
SB12/130 A	12 V	130 Ah	513 mm	223 mm	223 mm	45.5 kg
SB12/185 A	12 V	185 Ah	518 mm	274 mm	238 mm	61.5 kg

SONNENSCHEIN SOLAR

SONNENSCHEIN A600 SOLAR

- **Exceptional cycling performance – 3000+ cycles (with IUI charging, at 20 °C) at 60% Depth of Discharge C_{10}**
- **Dryfit Gel – VRLA technology**
- **Lowest energy consumption – saving costs**
- **Strong tubular plate technology – for longer life in the toughest conditions**
- **Proof against deep discharge – greater long-term energy delivery**
- **Horizontal mounting possible – easy installation and maintenance**
- **Completely recyclable – low CO_2 footprint**

+ info

Type	Nominal voltage	Nominal capacity C_{120} 1.85 Vpc 20°C	Length max.	Width max.	Height max.	Weight approx.
A602/295 Solar	2 V	294 Ah	105 mm	208 mm	399 mm	17.4 kg
A602/370 Solar	2 V	367 Ah	126 mm	208 mm	399 mm	22.0 kg
A602/440 Solar	2 V	440 Ah	147 mm	208 mm	399 mm	25.0 kg
A602/520 Solar	2 V	519 Ah	126 mm	208 mm	515 mm	30.0 kg
A602/625 Solar	2 V	623 Ah	147 mm	208 mm	515 mm	35.0 kg
A602/750 Solar	2 V	727 Ah	168 mm	208 mm	515 mm	39.0 kg
A602/850 Solar	2 V	845 Ah	147 mm	208 mm	690 mm	49.0 kg
A602/1130 Solar	2 V	1126 Ah	212 mm	193 mm	690 mm	66.0 kg
A602/1415 Solar	2 V	1408 Ah	212 mm	235 mm	690 mm	80.0 kg
A602/1695 Solar	2 V	1689 Ah	212 mm	277 mm	690 mm	95.0 kg
A602/1960C Solar	2 V	1994 Ah	212 mm	277 mm	759 mm	106.0 kg
A602/2600 Solar	2 V	2613 Ah	216 mm	400 mm	816 mm	149.0 kg
A602/3270 Solar	2 V	3266 Ah	214 mm	489 mm	816 mm	190.0 kg
A602/3920 Solar	2 V	3919 Ah	214 mm	578 mm	816 mm	238.0 kg

let the **sun** do the **work**

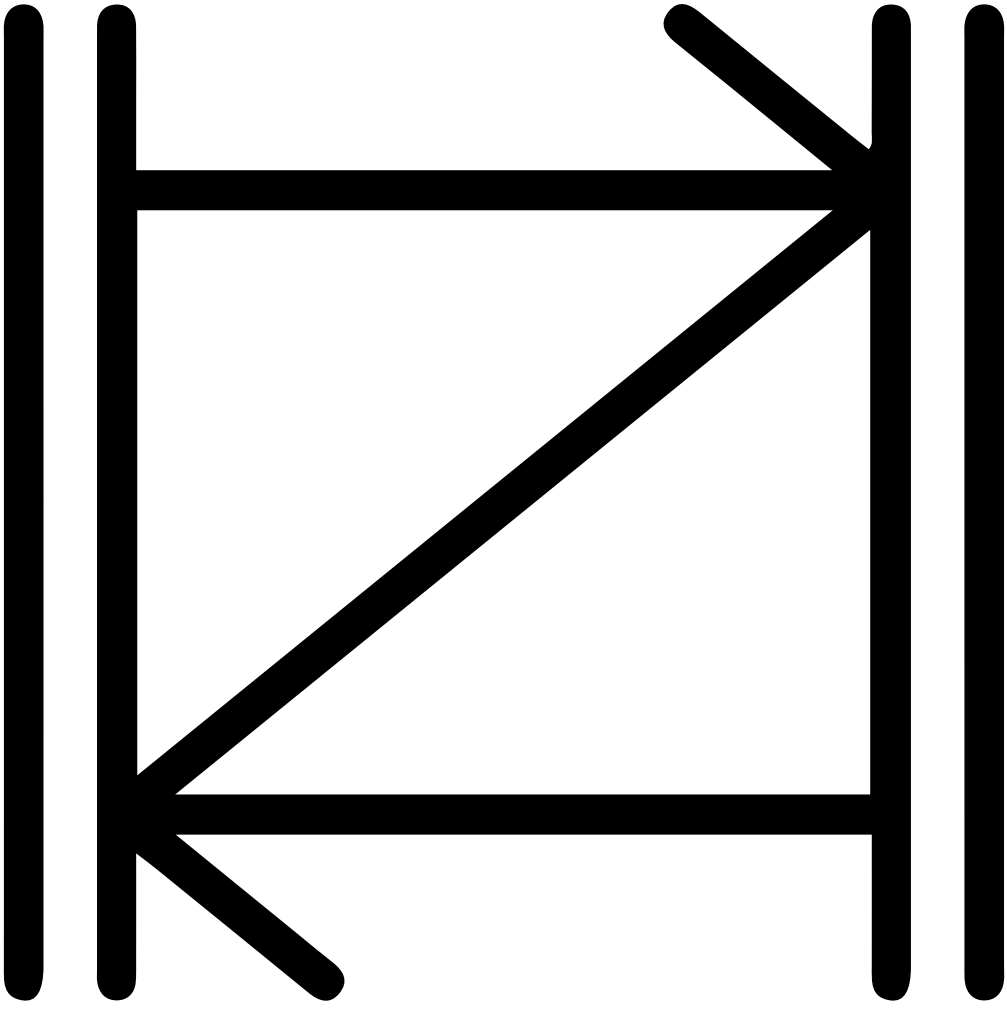

Mounting Systems

alusínsolar.com
solar structures

+ video

Structures For Solar Panels

In Alusín Solar we are specialists in the design, manufacture and installation of support systems for solar panels, the necessary element to fix the solar panel in a certain place providing firmness, security and a proper orientation. We have different types of structures, both for installations on the ground and on roofs of all types, including that type DECK, with PVC or asphalt cover where the roof cannot be drilled.

More than 300 projects, the presence in more than 21 countries and three continents have made us experts in the sector. We advise you on the choice of the structure that best suits your project, taking into account factors such as orientation, the necessary separation between the panels, the necessary surface area, the optimum angle and the installation site to make the most of solar radiation.

In our "Virtual Technical Office" section you will also find videos and resources which show you the particularities of each structure, its technical characteristics and how to implement it into your photovoltaic project.

History

From 2010, Alusín Solar has supplied and participated in more than 200 projects in 14 countries.

Based in Asturias (Spanish industrial core) Alusín Solar has been involved in designing, manufacturing and installing aluminum and metalic structures for every kind of photovoltaic solar systems. Currently Alusín Solar has its headquarters in Asturias (Spain), in addition of distributors in Chile, Honduras, Panama and Puerto Rico.

BULNES SYSTEM

Angle Structures

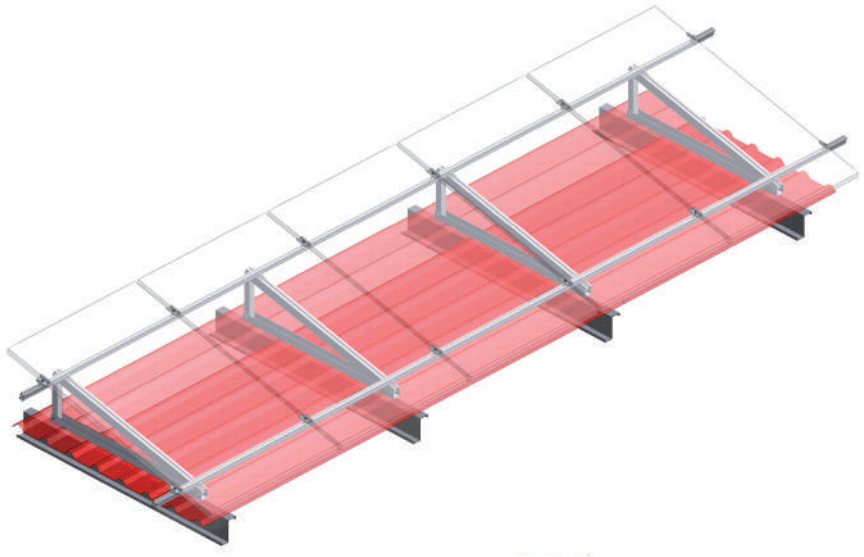

Guarantees

- **Designs based on local climatic loads**
- **Panels universal fixing**
- **High versatility and suitability**
- **Special clamps: Thin & Frameless**
- **Quick delivery**
- **Comfortable installation**
- **Materials 25 years guarantee**

Technical Specifications

- **Profiles, clamps and accessories made in first fusion extruded aluminum**
- **Stainless steel A2/A4 hardware qualities, depending on the climate, with surface treatments option**
- **Loads direct transmision to the main structure. Direct fixing to the straps**
- **Fixations with EPDM double-sided adhesive, ensuring tightness and resistance to thermal gradient and UV rays**
- **Antitheft screw option, hardware grooves system**
- **Several configurations available**
- **100% reusable materials**

Loads

WIND: Up to 240 km/h (150mph)

SNOW: Up to 2 kN/m2

*Calculations made based on climatic charges depending on the project's location

Weights

HORIZONTAL PANELS: 3.25 kg/m2

VERTICAL PANELS: 2.49 kg/m2

*Approximate weights including hardware

GULPIYURI SYSTEM

Flat Structures

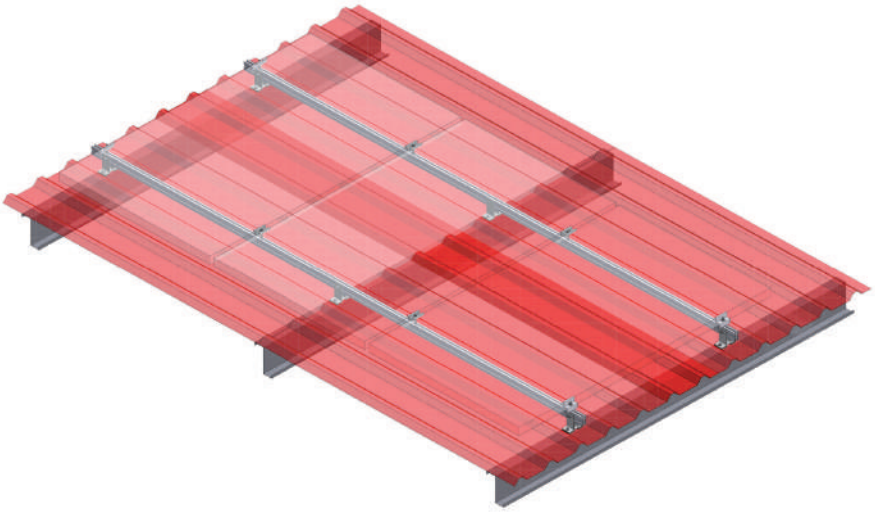

Guarantees

- **Designs based on local climatic loads**
- **Panels universal fixing**
- **High versatility and suitability**
- **Special clamps: Thin & Frameless**
- **Quick delivery**
- **Comfortable installation**
- **Materials 25 years guarantee**

Technical Specifications

- **Profiles, clamps and accessories made in first fusion extruded aluminum**
- **Stainless steel A2/A4 hardware qualities, depending on the climate, with surface treatments options**
- **Loads direct transmision to the main structure. Direct fixing to the straps**
- **Fixations with EPDM double-sided adhesive, ensuring tightness and resistance to thermal gradient and UV rays**
- **Antitheft screw option, hardware grooves system**
- **Several configurations available**
- **100% reusable materials**

Loads

WIND: Up to 240 km/h (150mph)

SNOW: Up to 2 kN/m2

*Calculations made based on climatic charges depending on the project's location

Weights

HORIZONTAL PANELS: 3.25 kg/m2

VERTICAL PANELS: 2.49 kg/m2

*Approximate weights including hardware

PICOS SYSTEM

Ballasted Structures

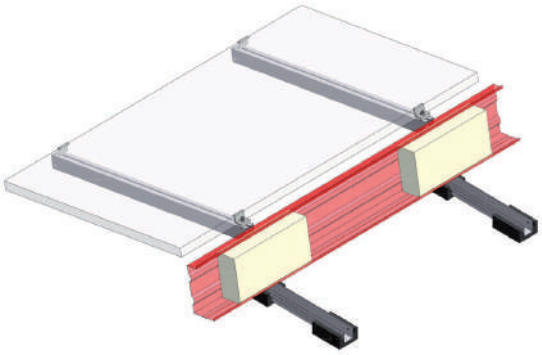

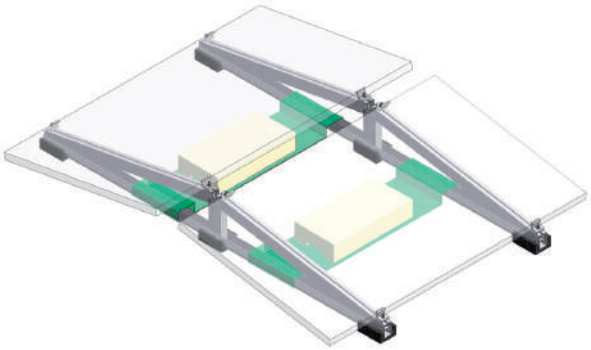

Guarantees

- **Designs based on local climatic loads**
- **Panels universal fixing**
- **High versatility and suitability**
- **Special clamps: Thin & Frameless**
- **Quick delivery**
- **Comfortable installation**
- **Materials 25 years guarantee**

Technical Specifications

- **Profiles, clamps and accessories made in first fusion extruded aluminum**
- **Stainless steel A2/A4 hardware qualities, depending on the climate, with surface treatments option**
- **System fixations by concrete ballasts. No need for perforations.**
- **Testing bench studied on a wind tunnel.**
- **Antitheft screw option, hardware grooves system**
- **Support bracket over rubber studs.**
- **100% reusable materials**

Loads

WIND: Up to 240 km/h (150mph)

SNOW: Up to 2 kN/m2

*Calculations made based on climatic charges depending on the project´s location

Weights

TWO RAFTERS PER MOCULE: 2.3 kg/m2*

SHARED RAFTERS: 1.64 kg/m2

*Only the structures. Ballasts not included.

CONSTÁLICA

building the structures of the future

+ video

Company

Constálica assumes a mission of innovation in the metal construction sector, supported by the experience and presence in the international markets, based on its innovative products, its capacity to develop flexible solutions, sustained by a highly qualified team focused on transforming needs into distinctive solutions.

The characteristics of the Madremax® product associated with the capacity for innovation of Constálica are the basis that allow the company to stand out in a sector of great competitiveness, namely in the following business areas:
Coverings and façades, industrial structures, residential structures, photovoltaic structures and other structures.

Constálica is a partner in the development of solutions for metal structures, responding to all stages of the process.
Research and development of solutions, structural calculation according to the client's project and follow-up of the project execution.

Focused on the clients' needs, Constálica became a unique partner in terms of competitiveness and creation of value.

Mission

Offering our clients complete construction solutions, with innovative and quality features, guaranteeing the expectations of the stakeholders.

Vision

Constálica intends to achieve a reference position in the global market, in the Metal Construction sector, respecting and promoting the sustainable development, the environment and the rationalization of resources.

Values

- Creation of value
- Competitiveness
- Innovation
- Motivation of Human Resources

GROUND

Single Post

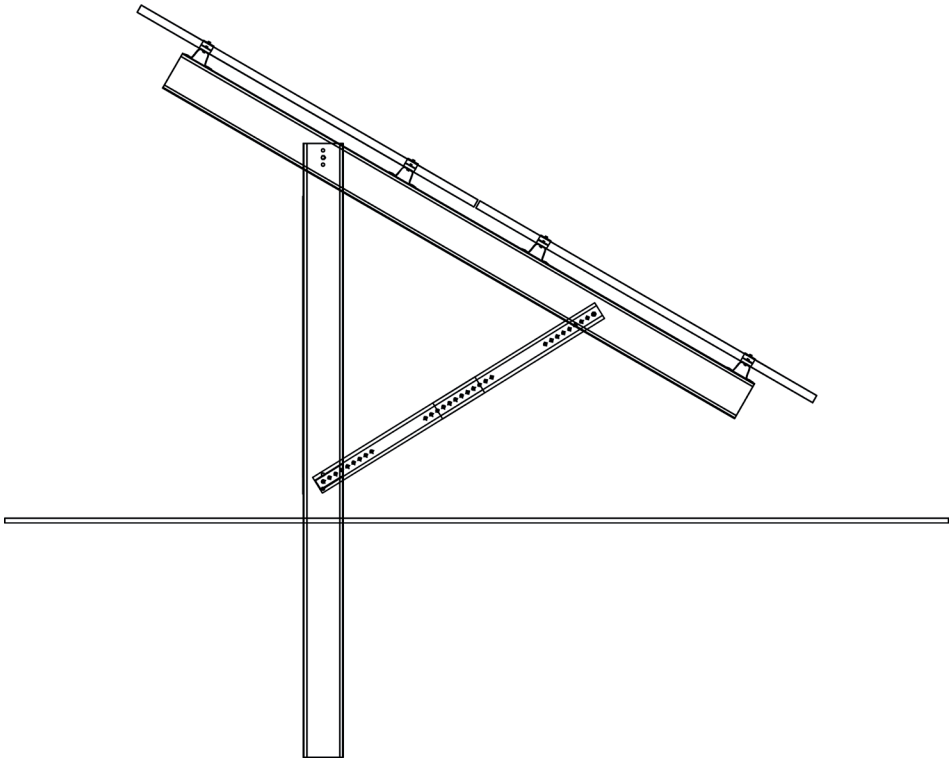

Guarantees

- **Designs based on local climatic loads**
- **Panels universal fixing**
- **High versatility and suitability**
- **Special clamps: Thin & Frameless**
- **Quick delivery**
- **Comfortable installation**
- **Materials 10 years guarantee**

Technical Specifications

- **Metallic structure in MadreMax® S350GD (According to EN 10346) + Magnélis® or equivalent;**
- **Accessories for Fixing Aluminum modules;**
- **Screws, nuts and washers for connecting the main structure in Dacromet®;**
- **Screws, nuts and washers for fixing stainless steel PV modules;**
- **EPDM;**
- **Minimum ground height: 500mm;**
- **Metal piles or Profile C in Magnélis®, or equivalent;**
- **Structural calculation, dimensioned according to the project specifications.**

GROUND

Bipost

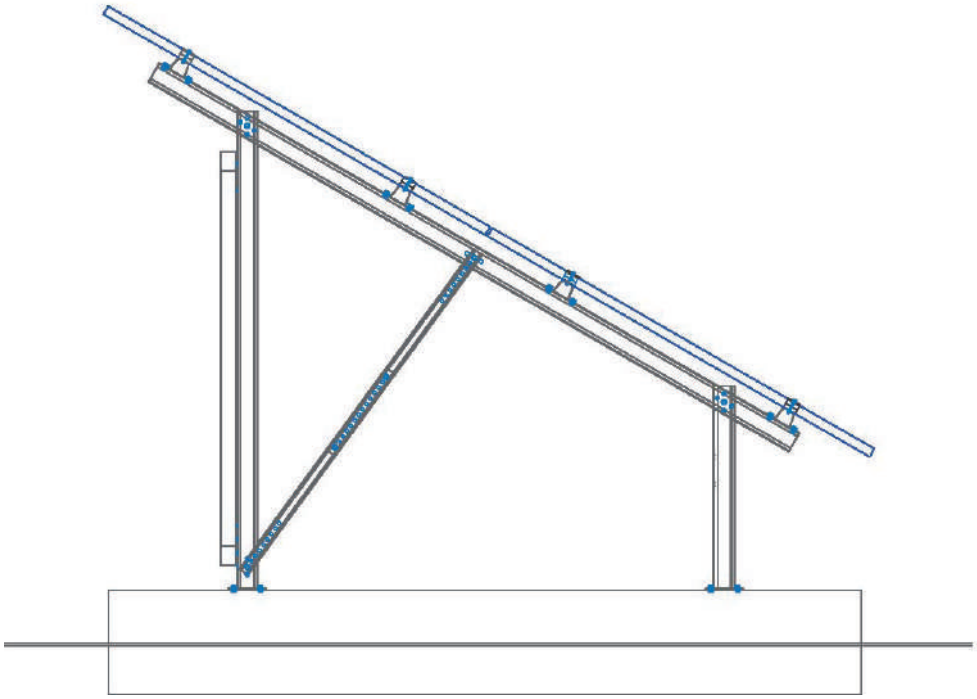

Guarantees

- **Designs based on local climatic loads**
- **Panels universal fixing**
- **High versatility and suitability**
- **Special clamps: Thin & Frameless**
- **Quick delivery**
- **Comfortable installation**
- **Materials 10 years guarantee**

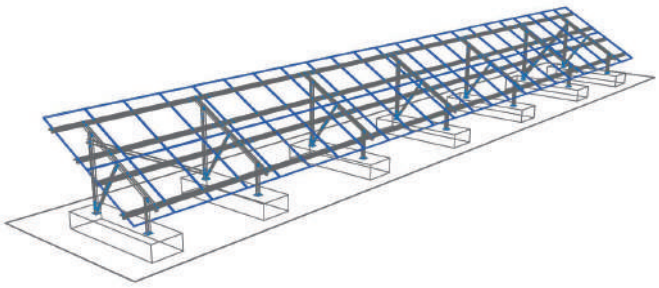

Technical Specifications

- **Metallic structure in MadreMax® S350GD (According to EN 10346) + Magnélis® or equivalent;**
- **Accessories for Fixing Aluminum modules;**
- **Screws, nuts and washers for connecting the main structure in Dacromet®;**
- **Screws, nuts and washers for fixing stainless steel PV modules;**
- **EPDM;**
- **Minimum ground height: 500mm;**
- **Metal piles or Profile C in Magnélis®, or equivalent;**
- **Structural calculation, dimensioned according to the project specifications.**

CARPORT

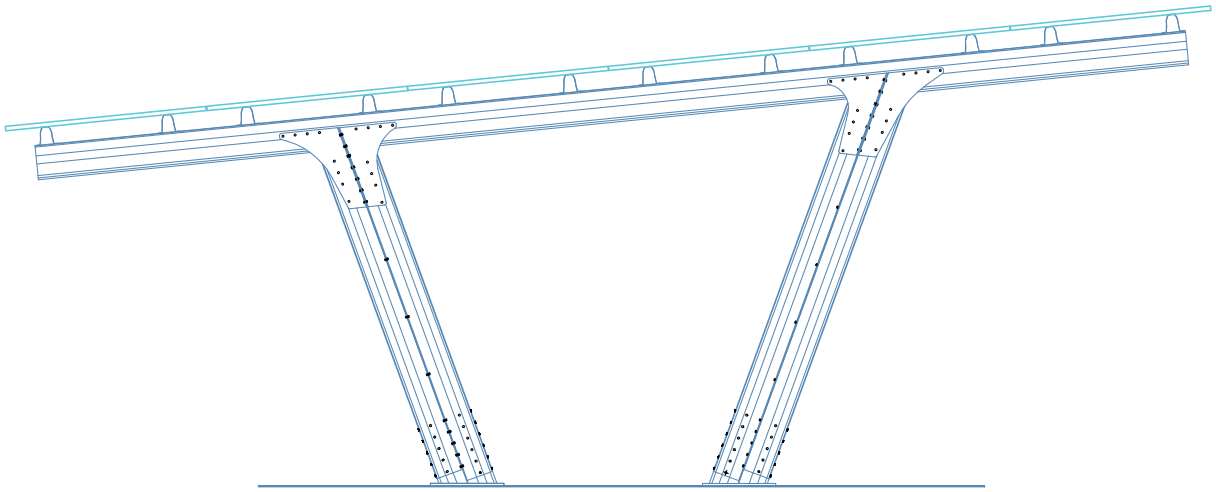

Two car parking

Guarantees

- **Designs based on local climatic loads**
- **Panels universal fixing**
- **High versatility and suitability**
- **Quick delivery**
- **Comfortable installation**
- **Materials 10 years guarantee**

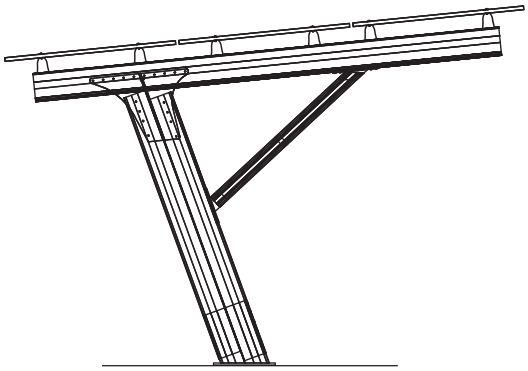

Single car parking

Technical Specifications

- **Material / coating: MadreMax® in S350 (according to EN 10346), S350 + Magnélis® finish or equivalent;**
- **MadreMax® pillars;**
- **MadreMax® beams;**
- **Fixing brackets for MadreMax® photovoltaic modules;**
- **Hot dip galvanized connection accessories, when applicable (according to BS EN ISO 1461-2009);**
- **Fixing system for aluminum photovoltaic panels;**
- **Screws, nuts and washers to connect the above elements;**
- **Metal piles or Profile C in Magnélis®, or equivalent;**
- **Structural calculation, dimensioned according to the project specifications.**

+ video

Company

POPSUN provides innovative, successul solutions for the personal production and consumption of solar energy. The fruit of many years research, they offer multiple benefits :

- generating solar energy in your garden to avoid the usual problems of roof installations

- optimising energy production

- simplifying installation with easier set-up

- driving down costs with competitive prices.

All POPSUN solutions are patented. They are made and assembled in Provence-Alpes-Côte d'Azur in the south of France.

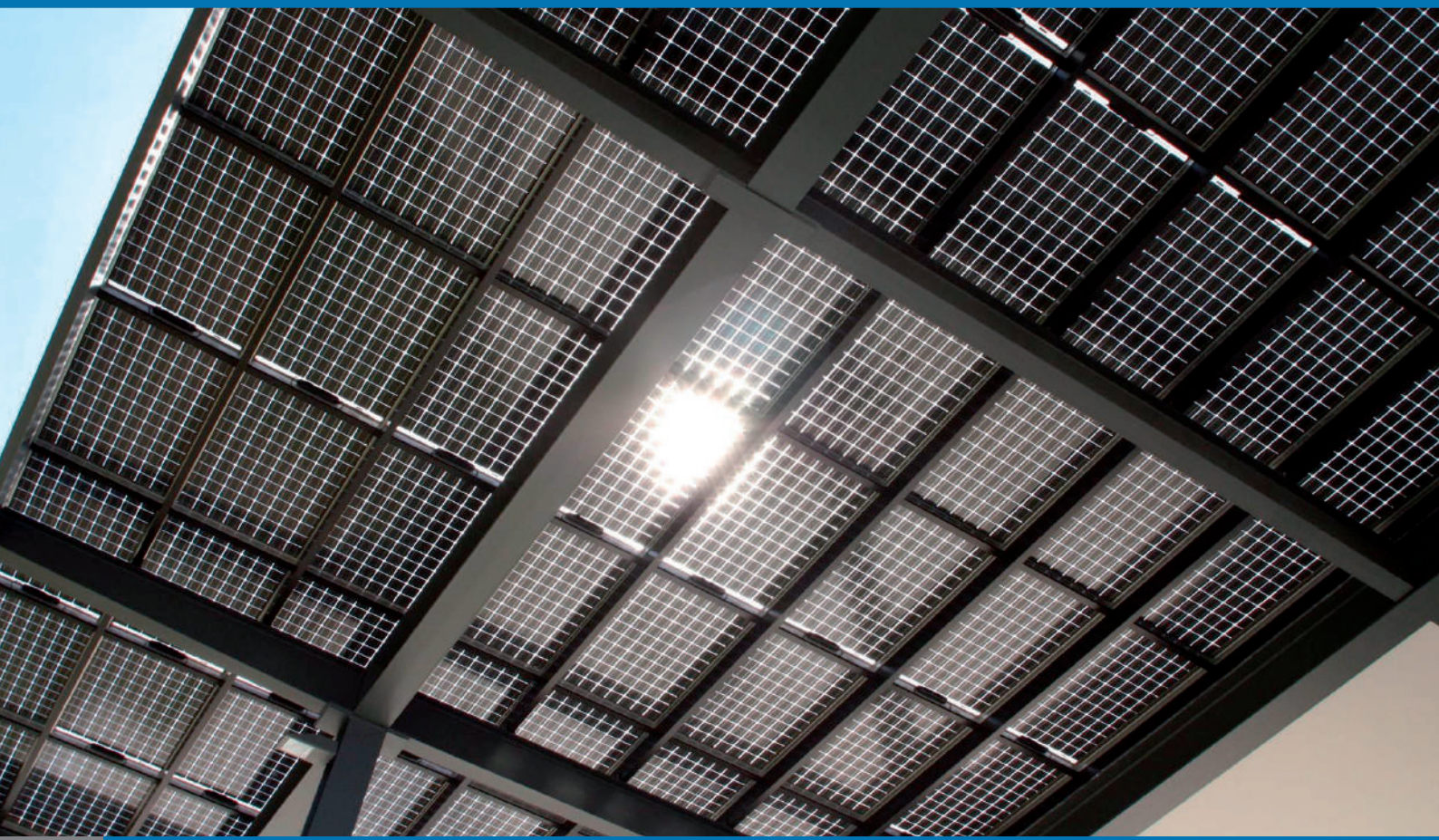

POPSUN

Size and performance

- Carports are available in versions for one, two, four or more places, according to your project.

- The bifacial panels generate energy on both sides : 100 % from the front and up to 25 % from back side. Energy production is optimized with improved panel ventilation.

Installation

- Foundations are not needed because of the integrated ballast certified according to NF standard EN 9111-1-4.

Popsun

- The kaleidosol shelters are declined in pergola, kiosk, and carport (shade).
- They receive 9, 12, 15, 18 or 21 modules positioned in portrait according to the chosen configuration.
- Important note: the shelters must not be installed at the seaside or in ZONE 4 (Eastern coast of Corsica) without written authorization from the supplier which will have to be the object of a specific study.
- Do not close one or more sides of the shelter.
- The altitude of the installation must be less than 500 meters.
- The structure of the shelter is weighted and does not require any foundation, however the surface on which you put the shelter must be all-com pressed down on 30 cm, on asphalt, or on a concrete slab.
- The laying on sand or grass is prohibited.

ESDEC

INNOVATIVE **MOUNTING SYSTEMS**

+ video

Company

Esdec has supplied universal mounting systems for roof-mounted PV installations on flat and pitched roofs since 2004. With over 15 years of experience and over 7GW of solar panels installed, we have developed into an international market leader.

Quick, Reliable, Innovative

Esdec was founded by installers. Convenience for the installer is always the priority in the design of our products. Our mounting systems consist of light, sturdy components that can be mounted quickly and easily.

NEW

International market Leaders

K2 Systems stands for worldwide power generation from solar energy. The heart of the company is the development of installation-friendly mounting systems that are tailored to the needs of our customers, though the soul is the common spirit of all employees.

Together we define technical innovation and set new service standards for a sustainable future.

FLAT ROOFS

FlatFix Fusion

NEW

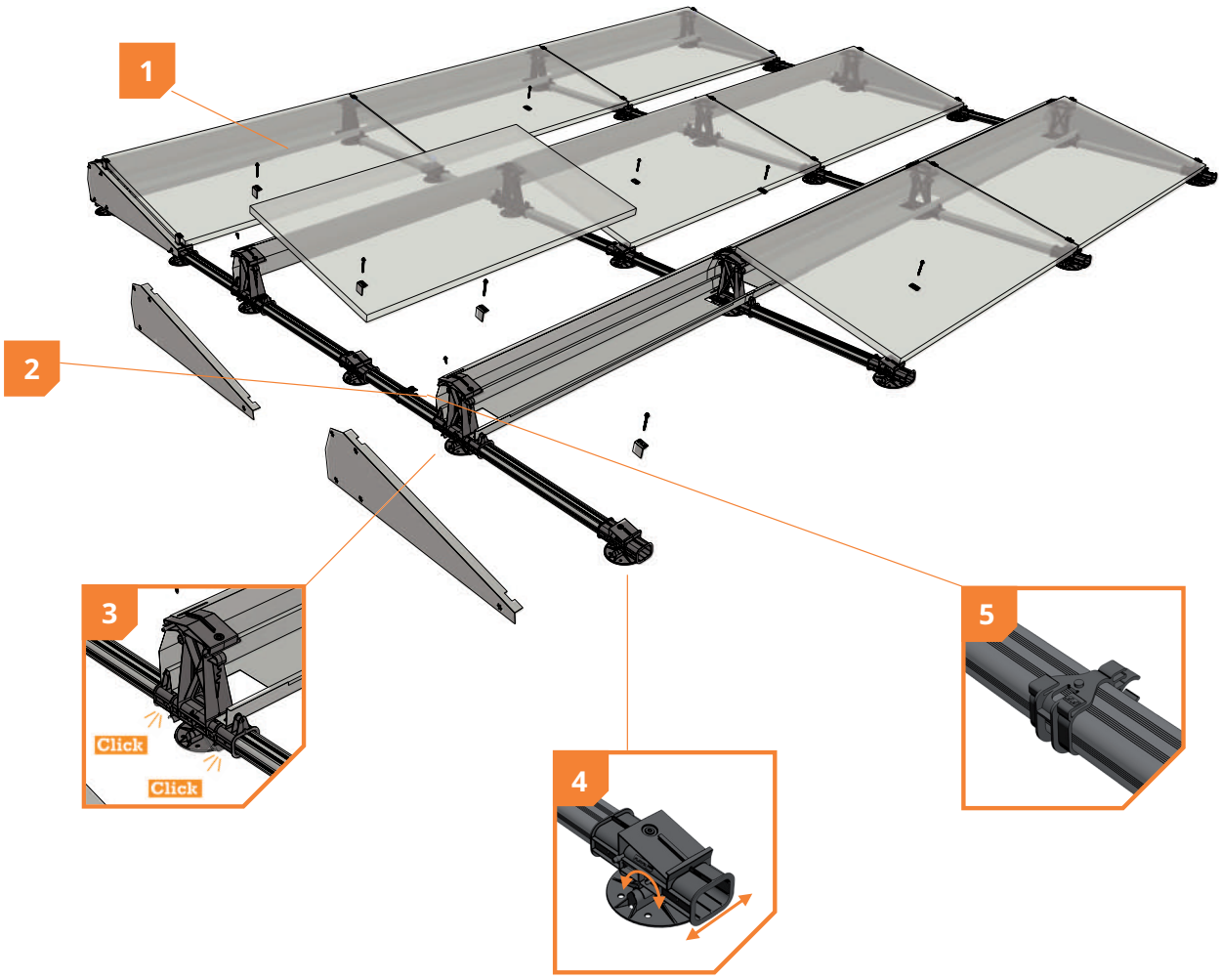

+ info

Advantages for the installer

- **Modular mounting solution with click connection**
- **Flexible installation on any roof**
- **Integrated grounding and equipotential bonding**
- **Ease of installation with optimizer ready cable clip**

Advantages for the end user

- **Roof-specific configuration**
- **Safe and reliable**
- **No damage of the roof material**
- **20-year warranty**

1. **Modular click system**
2. **Lightweight system**
3. **Unique click connection**
4. **With thermal decoupling**
5. **With integrated cable management**

PITCHED ROOFS

ClickFit EVO Corrugated roof

NEW

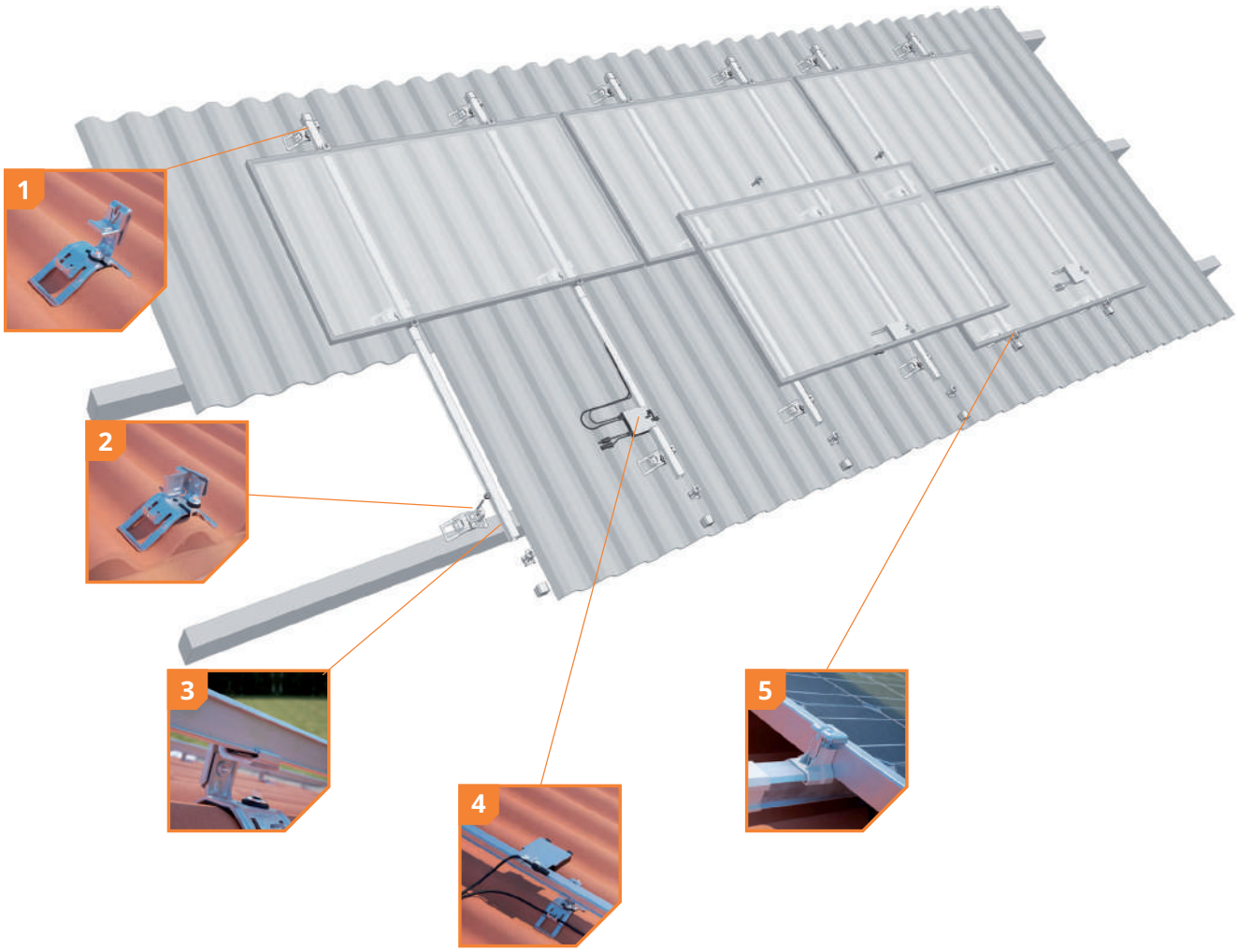

+ info

The benefits for the installer

- 4 components
- 1 tool
- Easy installation on new & existing roofs
- Safe and reliable
- 20-year product warranty

The benefits for your customer

- Rock-solid base for solar panels
- 100% waterproof
- Safe and reliable
- 20-year product warranty
- The roof stays intact

1 **Universally adjustable**

2 **Attachment using existing corrugated sheet screws**

3 **Unique click connection**

4 **Integrated cable management**

5 **The right dimensions at all times**

PITCHED ROOFS

ClickFit EVO Tiled roof

NEW

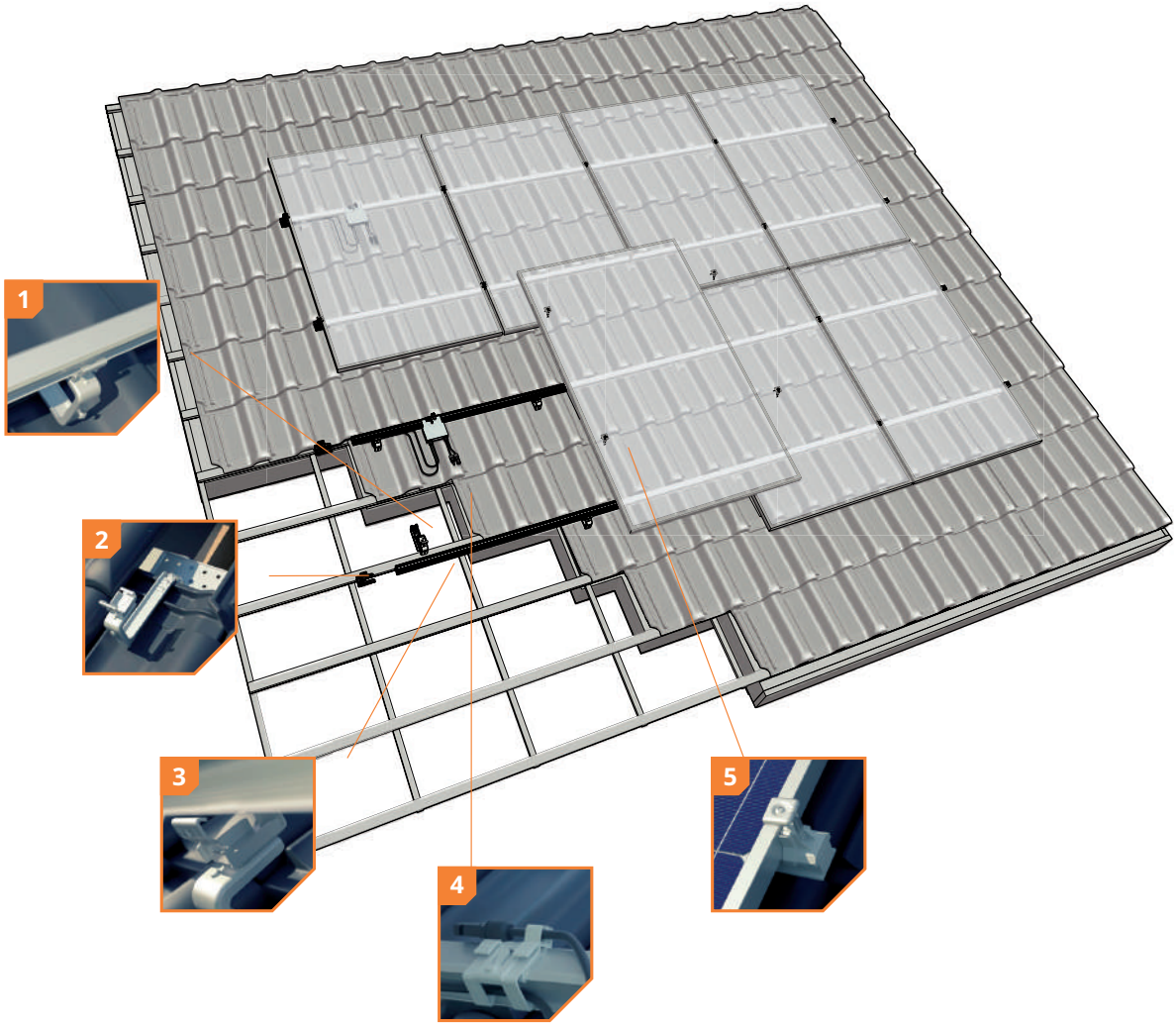

+ info

Benefits for the installer

- Up to 40% quicker mounting
- Only 4 components
- Light and durable
- Only 1 tool necessary
- Up to 20 years' warranty

Benefits for the end user

- Rock solid basis for solar panels
- The roof stays intact
- Reliable
- Up to 20 years' warranty

1 **Universally adjustable**

2 **Screw option possible**

3 **Fully renewed snap connection mechanism**

4 **Integrated cable management**

5 **Always the right size**

PITCHED ROOFS

ClickFit EVO Steel roof

NEW

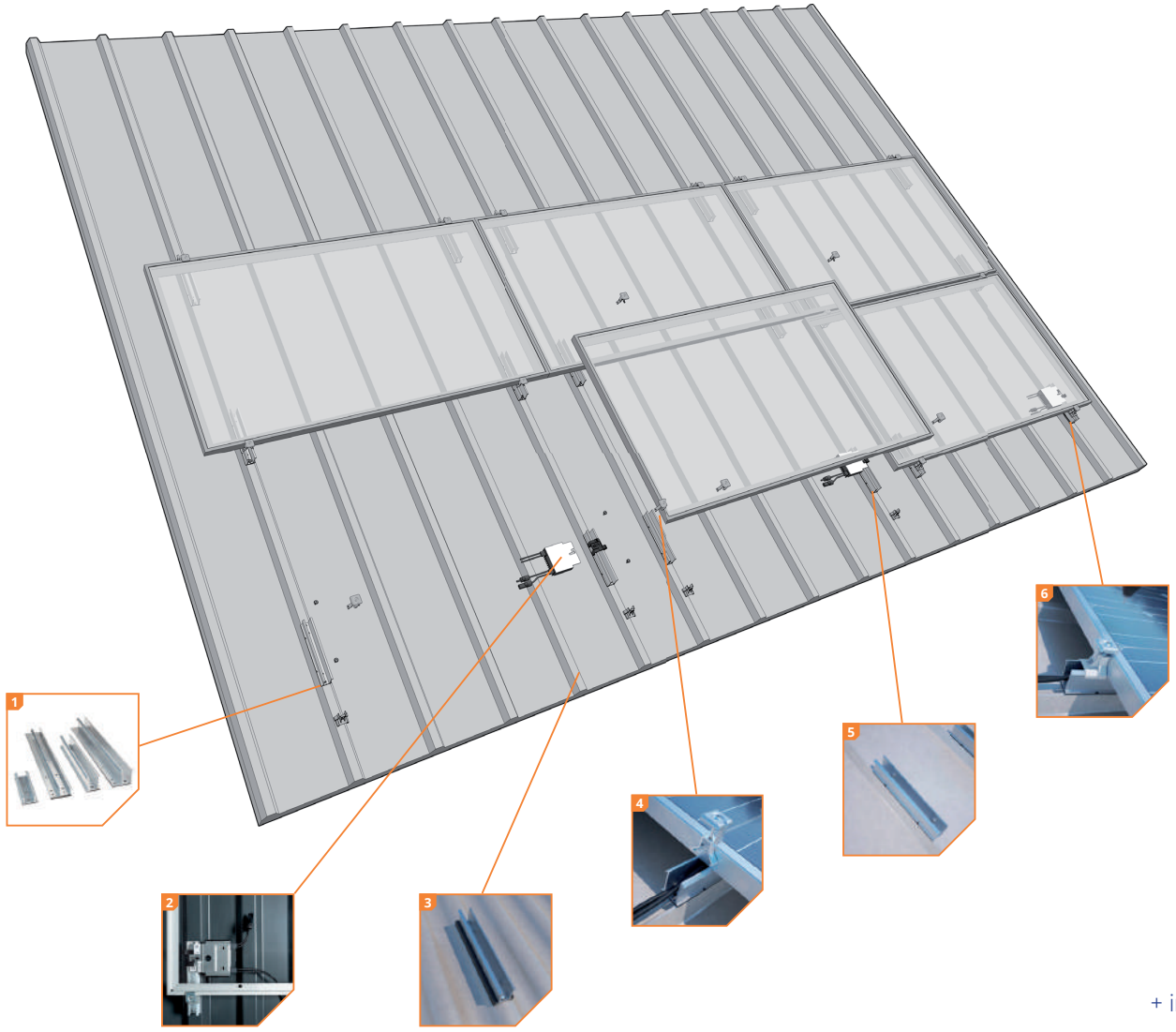

+ info

Benefits for the installer

- Choice of low or high mounting profiles
- No need to drill into the roof any more
- Only 4 components
- Light and strong
- 1 tool
- Optimizer clamp with cable management can be used
- Optional: adapter profile for corrugated steel roof
- Up to 20 years warranty

Benefits for the end user

- Integrated water barrier
- Very solid base for solar panels
- No unnecessary drilling
- Safe and reliable
- Up to 20 years warranty

1 **Choice of 4 mounting profiles**

2 **Fitting optimizer**

3 **Suitable for corrugated steel roof**

4 **Universal module clamp**

5 **Mounting profiles with rubber seals**

6 **Just 4 components**

be **bright,** be **smart**

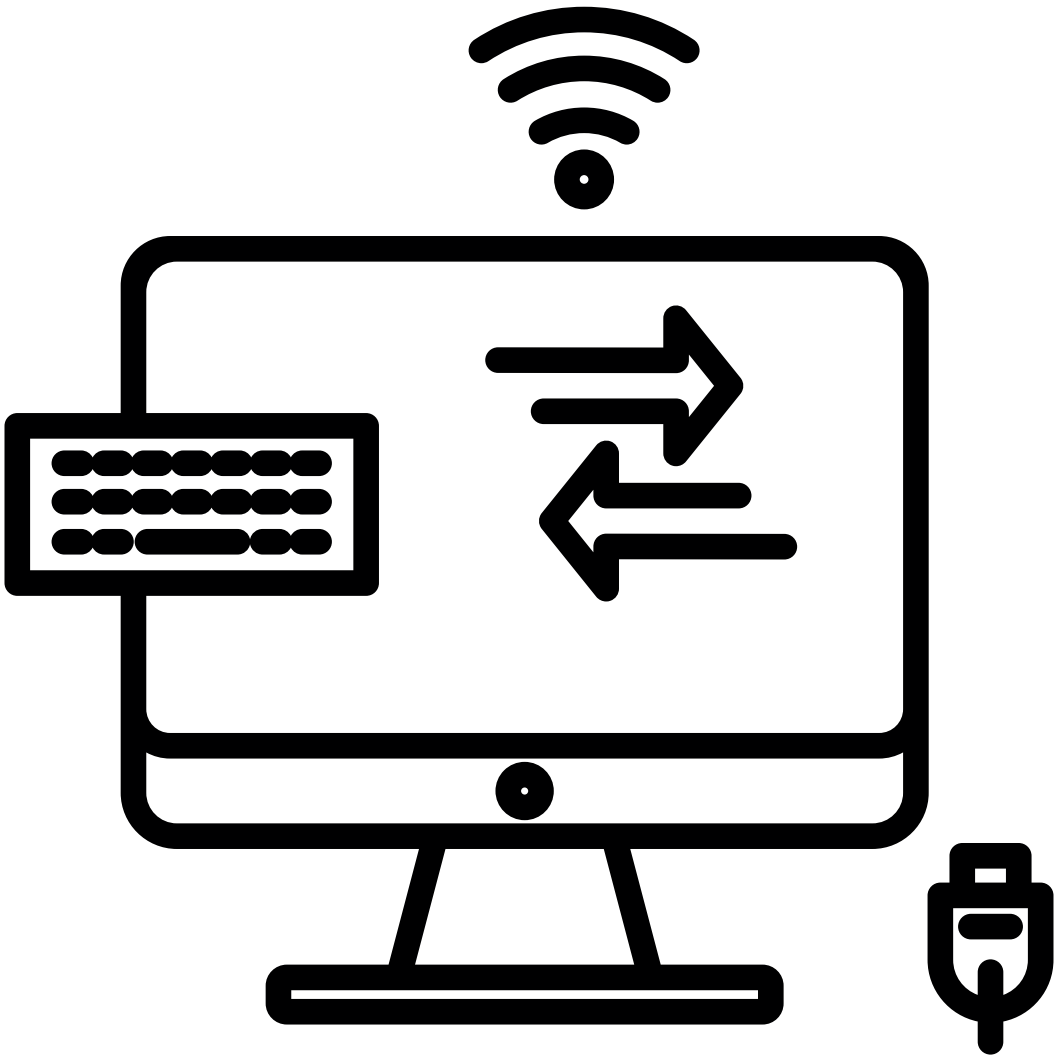

Monitoring Systems

SmartLogger 3000A

+ info

Smart
Smart zero export control design

Simple & Easy
Easy to install on site

Safe & Reliable
Safety by lighning protection module

SmartLogger 2000

Smart + info

- Functioning as communication manager, data logger, PLC master and Ethernet switch;
- Multiple communication interfaces including PLC, RS485, Fast Ethernet, and SFP ports, flexible applications;
- STP and RSTP supported for fiber ring network and ring protection;
- Bluetooth, embedded WEB and USB supported, user-friendly;
- Fast and reliable active and reactive power compensation control;
- Smart I-V Curve Diagnosis supported.

Simple

- Up to 200 devices supported, including up to 150 inverters;
- An integration of data collection, protocol conversion and Ethernet switch

Reliable

- Industrial application and high reliability;

Smart Power Sensor

Accurante
Class 1 measurement accurancy

Simple & Easy
LCD display, easy to set and check

Safe & Reliable
Overall power consumption ≤ 1 W

+ info

Smart Dongle

Smart
2G, 3G, 4G / WLAN communication
Support 3rd-party monitoring system

Simple
Plug & Play

Reliable
IP65 | Support auto reconnection

+ info

Smart Meter GM3000 / GM1000

+ info

GoodWe Smart Meter is designed with high precision small dimensions, convenient operation and installation. It is available for both single-phase and three-phase grid system connection to detect voltage, current, power and energy, for working with invertersincluding SEMS systems for the purpose energy management.

- **Modular Design**
- **Precise Data Collection**
- **Easy Installation**

EzLogger Pro

+ info

EzLogger Pro is a self-developed monitoring device by GoodWe. In combination with a GoodWe solar inverter, it can easily read and record all key plant data and constantly transmit the data to the GoodWe portal via internet.

The Home of Energy Monitoring

+ info

Real-time solar generation and energy consumption

Insight information & minute-level monitoring

History data (min, hour, day, week, month)

Compare the energy you've generated and imported

See how much electricity you import and export

View the excess power being diverted to storage

Efergy Pro

Power on the gateway

Connect to WiFi

Configure sensor(s) & transmitter

MEIER-NT GmbH
WWW.MEIER-NT.DE

ADL-SR® SONNENMETER the irradiation sensor

+ info

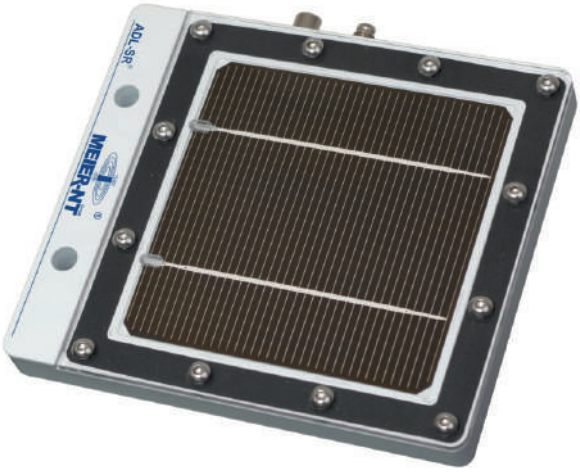

- **Each sensor is supplied with an individual calibration**
- **The sensor is connected via a 2-wire RS485 bus with open vendor-independent Modbus RTU protocol**
- **Up to 253 sensors of different types can be connected to each bus (example sensors: sun sensor, string monitor, digital inputs, analog inputs, etc.)**
- **Production in Germany is certified with ISO9001:2008 and ISO14001:2004 standard**
- **Simple installation**
- **No accurancy loss dur to cable lengths**

Accessories for ADL-SR® SONNENMETER

ADL-SR® module temperature sensor PT1000

ADL-SR® wind sensor 0,5 - 40 m/s

solar is the **energy** for **future**

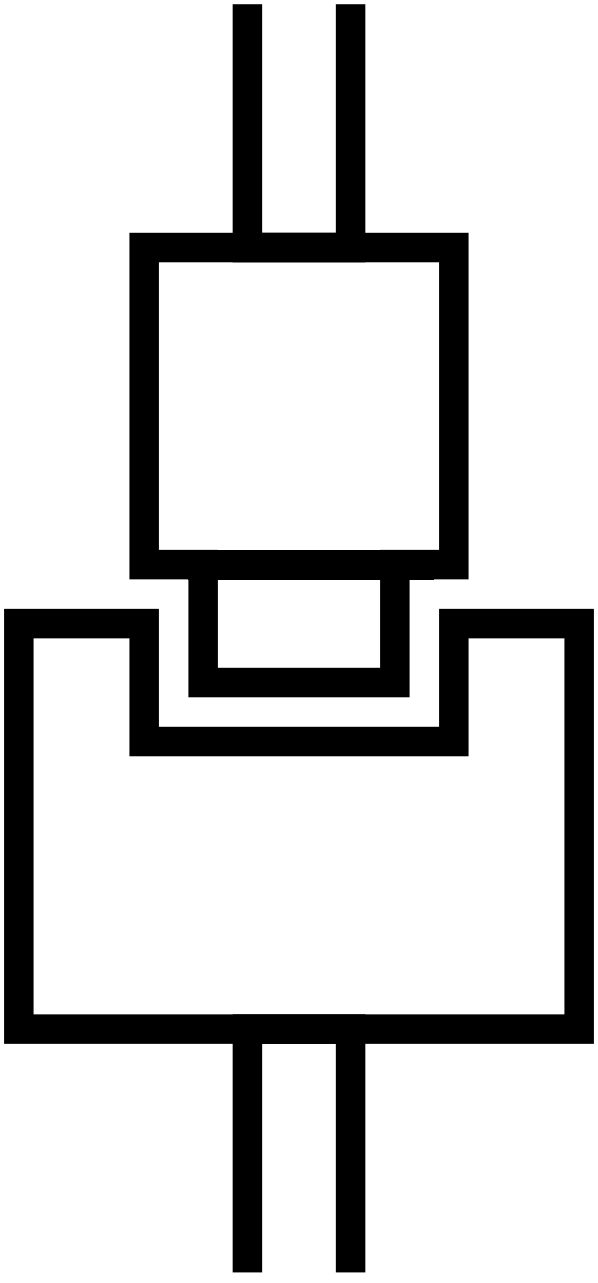

Equipment & Accessories

TÜV SOLAR CABLE (H1Z2Z2-K)

1- 1st insulation: halogen free special copolymer

2- 2nd insulation: halogen free special copolymer

3- Copper conductor

1st and 2nd INSULATION COLOUR

Twisted flexible tinned copper conductor

CET SOLAR CABLE 1Xn,00 mm2 1.0/1.0 kV H1Z2Z2-K TÜV Rheinland Type Approved R60113052 IEC 60332-1 CE

+ info

Type	Section	Max Wire Diameter of Conductor	INSULATION THICKNESS 1ST / 2ND	OVERALL DIAMETER	RAME STAGNATO TINNED COPPER	REACTANCE (at 50 Hz)
	mm²	mm	mm	mm	Ω/Km	Ω/Km
TÜV SOLAR CABLE	1x2.50	0.26	0.70 / 0.80	5.00	8.21	/
	1x4.00	0.31	0.70 / 0.80	5.40	5.09	0.143
	1x6.00	0.31	0.70 / 0.80	6.20	3.39	0.135
	1x10.0	0.41	0.70 / 0.80	7.40	1.95	0.119

*Diameters tollerances: according with TÜV standards

ACE SL7000

+ info

Itron's ACE SL700 meter range offers a solution for all industrial and substation applications. Equipped with flexible communication technology combined with elements of traditional C&I metering, the ACE SL7000 meter range offers the versatility and flexibility required to meet today's rapidly changing markets.

ACE6000

+ info

ACE6000 four-quadrant load profiling meters support the new needs arising from deregulation and competition in the electricity market as well as classic metering.

Weidmüller

BUKO WM4 C BT

+ info

WM4 C photovoltaic connectors

- One crimp contact for 4 mm² and 6 mm² cables
- TÜV approval according to the latest standard DIN EN 50521
- Can be loaded with a rated current of up to 35 A

SFKO WM4 C BT

+ info

WM4 C photovoltaic connectors

- One crimp contact for 4 mm² and 6 mm² cables
- TÜV approval according to the latest standard DIN EN 50521
- Can be loaded with a rated current of up to 35 A

BUGH WM4 C BT

+ info

WM4 C photovoltaic connectors

- One crimp contact for 4 mm² and 6 mm² cables
- TÜV approval according to the latest standard DIN EN 50521
- Can be loaded with a rated current of up to 35 A

SFGH WM4 C BT

+ info

WM4 C photovoltaic connectors

- One crimp contact for 4 mm² and 6 mm² cables
- TÜV approval according to the latest standard DIN EN 50521
- Can be loaded with a rated current of up to 35 A

TELERIGIN

UNIQUE TECHNOLOGY FOR TELEMETRY

RB800

+ info

The RB800 terminal series is the complete modem solution for wireless m2m applications. Based on the high quality module, it is available as DUAL or QUAD band versions and offers high level GSM/GPRS/UMTS features in a compact aluminum housing with all the standardized interfaces and optionally GPIO, SD memory card, backup battery or dual SIM option. Together with its small size and wide supply voltage range, it makes it easy to integrate into all kinds of machines.

Free and Green
energy from sun

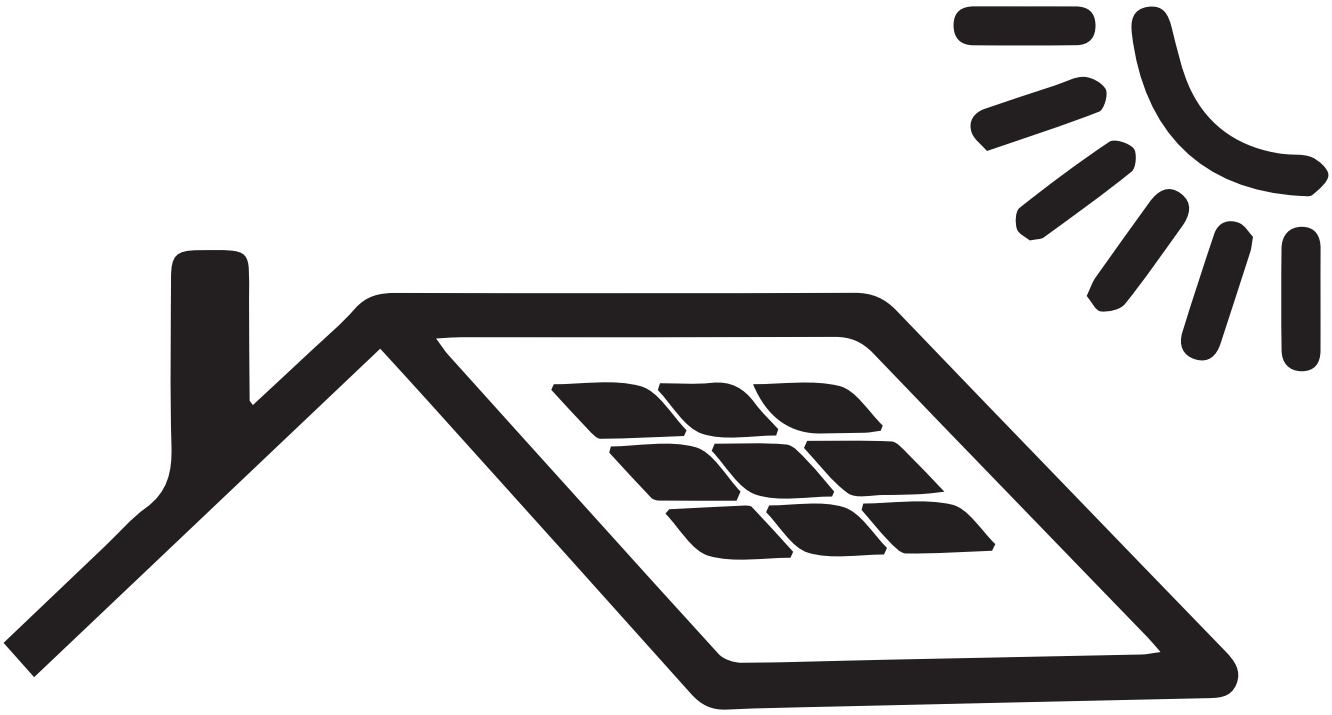

Residencial Kits

solar ENERGYKIT
Power by VOLTALIA

Modular Solar Energy Kit - DIY

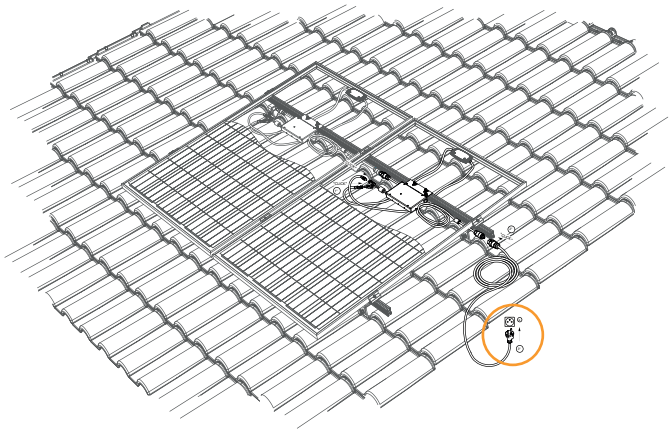

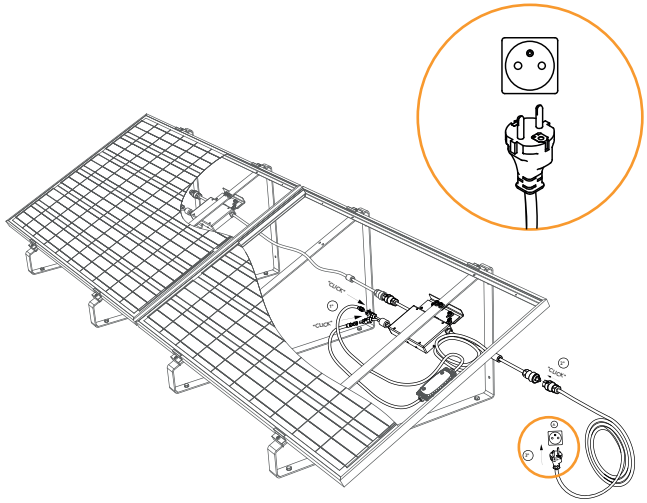

(illustrative images)

Advantages

- Produce your own energy from an endless source, the SUN
- Reduce your energy bill
- Protect the environment by producing energy without CO2 emissions or other particles
- Modular KIT expandable

What is included?

The SOLAR ENERGY KIT contains a photovoltaic system with all components needed to start immediately working:

- 1 photovoltaic module
- 1 micro inverter
- 1 fixing structure
- Cable and plugs for connection
- Screws and accessories
- 1 instruction manual for installation

Learn more at:

www.energy-kit.com

Solar Energy Kit Plus

1.98 KW

- Monophasic
- Module Astro Semi CHSM60M 330W
- Inverter GoodWe GW2000-XS
- GoodWe Smart Meter GM1000
- Mounting System to be defined

2.31 KW

- Monophasic
- Module Astro Semi CHSM60M 330W
- Inverter Huawei Sun2000 2KTL
- Smart Power Sensor Huawei - DDSU666-H
- Mounting System to be defined

3.30 KW

- Monophasic
- Module Astro Semi CHSM60M 330W
- Inverter Huawei Sun2000 3KTL
- Smart Power Sensor Huawei - DDSU666-H
- Mounting System to be defined

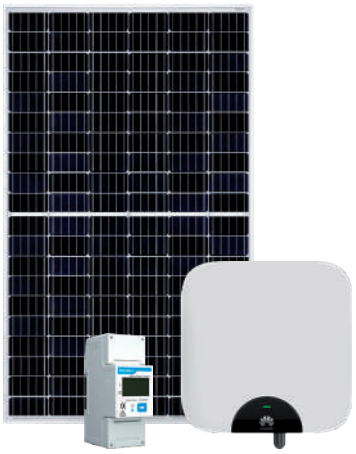

4.62 KW

- Monophasic
- Module Astro Semi CHSM60M 330W
- Inverter Huawei Sun2000 4.6KTL
- Smart Power Sensor Huawei - DDSU666-H
- Mounting System to be defined

6.60 KW

- Triphasic
- Module Astro Semi CHSM60M 330W
- Inverter Huawei Sun2000 6KTL-M0
- Smart Power Sensor Huawei - DTSU666-H
- Mounting System to be defined

8.58 KW

- Triphasic
- Module Astro Semi CHSM60M 330W
- Inverter GoodWe GW8K-ET (EzMeter included)
- Mounting System to be defined

Solar Energy Kit Storage

3.30 KW

- Monophasic
- Module JASOLAR JAM60S17-325~330W/MR Black
- Inverter GoodWe GW3048-EM
- LG RESU - 3.3(2.9kWh)
- GoodWe Smart Meter GM1000
- Mounting System to be defined

5.28 KW

- Monophasic
- Module JASOLAR JAM60S17-325~330W/MR Black
- Inverter GoodWe GW5048-ES
- Alpha-ESS Smile 5 - 5.7 kWh
- GoodWe Smart Meter GM1000
- Mounting System to be defined

5.28 KW

- Triphasic
- Module JASOLAR JAM60S17-325~330W/MR Black
- Inverter GoodWe GW5K-ET
- BYD Battery-Box HV power class H 6.4
- GoodWe Smart Meter GM3000
- Mounting System to be defined

8.58 KW

- Triphasic
- Module JASOLAR JAM60S17-325~330W/MR Black
- Inverter GoodWe GW8K-ET
- BYD Battery-Box HV power class H 9.0
- GoodWe Smart Meter GM3000
- Mounting System to be defined

voltalia

www.voltalia.com

MPrime Solar Solutions S.A.
Zona Industrial, Apartado 36 - 3684-001 Oliveira de Frades, Portugal
+351 232 811 381 | distribution.pt@voltalia.com

Voltalia S.A.
45 impasse de la Draille, Parc de la Duranne
13100 Aix-en-Provence, France
+33 4 42 53 53 80 | distribution.fr@voltalia.com

Voltalia S.A.
Calle Pollensa nº4, planta baja, oficina 8, 28290 Las Rozas de Madrid, España
+34 914 258 459 | distribution.es@voltalia.com

Voltalia UK Ltd.
One Lyric Square, W6 0NB, London, UK
+44 20 39 94 10 94 | distribution.uk@voltalia.com

Voltalia S.A.
340, Kifissias Avenue, 15451 Neo Psychiko Athens, Greece
+30 21 06 72 95 23 | distribution.gr@voltalia.com

Voltalia Italia SRL
Viale Montenero 32, 20135, Milano, Italy
+39 02 89 095 269 | distribution.it@voltalia.com

© 2020, Marketing & Communication Voltalia Group